COPY NO. 1

MOUNT POLLEY MINING CORPORATION
MOUNT POLLEY MINE
TAILINGS STORAGE FACILITY

OPERATION, MAINTENANCE AND SURVEILLANCE MANUAL FOR STAGE 3 (EL. 944) EMBANKMENT (REF. NO. 11162/13-3)

Knight Piésold
CONSULTING

CUBE
96-1246
Box 18.
MP00080

MOUNT POLLEY MINING CORPORATION
MOUNT POLLEY MINE
TAILINGS STORAGE FACILITY

OPERATION, MAINTENANCE AND SURVEILLANCE MANUAL FOR STAGE 3 (EL. 944) EMBANKMENT (REF. NO. 11162/13-3)

DRAFT

Rev. No.	Revision	Date	Approved
A	Issued in DRAFT for review	August 17, 2000	KJG

MINISTRY OF
ENERGY AND MINES
REC'D APR 25 2001

Knight Piésold Ltd.

Suite 1400
750 West Pender Street
Vancouver, British Columbia
Canada V6C 2T8

Telephone: (604) 685-0543
Facsimile: (604) 685-0147
E-mail: kpl@knightpiesold.com

Knight Piésold
CONSULTING

GRIT 3456

Knight Piésold
CONSULTING

MOUNT POLLEY MINING CORPORATION
MOUNT POLLEY MINE
TAILINGS STORAGE FACILITY

OPERATION, MAINTENANCE AND SURVEILLANCE MANUAL FOR STAGE 3 (EL. 944) EMBANKMENT (REF. NO. 11162/13-3)

TABLE OF CONTENTS

DRAFT

			PAGE
SECTION 1.0	INTRODUCTION		1
	1.1	SCOPE OF MANUAL	1
	1.2	GENERAL FEATURES OF FACILITY	2
	1.3	DESIGN BASIS	4
	1.4	ACCESS INFORMATION	4
	1.5	ASSIGNMENT OF RESPONSIBILITY	5
	1.6	INSPECTION FREQUENCIES AND COMMUNICATION	5
	1.7	OTHER AGENCIES	6
	1.8	TRAINING SCHEDULES	6
	1.9	DATA REPORTING	6
	1.10	OPERATING LOG	7
	1.11	PUBLIC SAFETY	8
	1.12	RESTRICTED AREAS	8
	1.13	SECURITY PLANS	9
	1.14	DISTRIBUTION OF MANUAL	9
	1.15	REVISIONS TO MANUAL	9
	1.16	REFERENCE DOCUMENTS	10
SECTION 2.0	RESERVOIR OPERATION		13
	2.1	GENERAL	13
	2.2	RESERVOIR LEVELS AND FLOOD OPERATION	13

	2.3	RESERVOIR FILLING AND DRAWDOWN	14
	2.4	DISCHARGE FACILITIES	14
SECTION 3.0	MAINTENANCE		15
	3.1	GENERAL	15
	3.2	MAINTENANCE REQUIREMENTS	15
SECTION 4.0	SURVEILLANCE		17
	4.1	GENERAL	17
	4.2	INSPECTIONS AND TESTS	17
	4.2.1	General	17
	4.2.2	Routine Inspections	18
	4.2.3	Intermediate Inspections	19
	4.2.4	Equipment Tests	20
	4.2.5	Special Inspections	20
	4.3	INSTRUMENTATION	20
	4.4	INCREASED LEVELS OF SURVEILLANCE	21
SECTION 5.0	EMERGENCY PLANNING AND COMMUNICATIONS DIRECTORY		23
	5.1	GENERAL	23
	5.2	EMERGENCY PLAN	23
	5.3	EMERGENCY SITUATIONS AND RESPONSES	24
	5.4	COMMUNICATION SYSTEMS AND DIRECTORIES	24
	5.5	CONSTRUCTION EQUIPMENT AND MATERIALS	24
	5.6	REVIEWS	25
SECTION 6.0	TAILINGS MANAGEMENT SYSTEM COMPONENTS		26
	6.1	TAILINGS BASIN	26
	6.1.1	General Description	26
	6.1.2	Basin Filling Characteristics	26
	6.1.3	Basin Liners	26
	6.1.4	Monitoring Requirements	27

DRAFT

	6.1.5	On-going Construction	28
6.2	TAILINGS DEPOSITION		28
	6.2.1	Deposition Strategy	28
	6.2.2	Tailings Pipework	29
	6.2.3	Operating Procedures	32
	6.2.4	Monitoring Requirements	37
	6.2.5	Inspection and Maintenance	38
6.3	TAILINGS EMBANKMENTS		40
	6.3.1	General Description	40
	6.3.2	Previous Construction	40
	6.3.3	Embankment Drains	41
	6.3.4	On-going Construction	43
	6.3.5	Instrumentation and Monitoring	45
	6.3.6	Inspection and Maintenance	49
6.4	SEEPAGE COLLECTION PONDS		50
	6.4.1	General Description	50
	6.4.2	System Requirements	51
	6.4.3	Operating Procedures	52
	6.4.4	Monitoring Requirements	52
	6.4.5	Inspection and Maintenance	52
6.5	RECLAIM SYSTEM		53
	6.5.1	General Description	53
	6.5.2	Monitoring Requirements	54
	6.5.3	Inspection and Maintenance	55
6.6	MAKE-UP WATER SUPPLY		56
	6.6.1	General Description	56
	6.6.2	Monitoring Requirements	57
	6.6.3	Inspection and Maintenance	58
6.7	CLOSURE AND RECLAMATION		61
	6.7.1	General	61
	6.7.2	On-going Reclamation	61
	6.7.3	Final Tailings Deposition	62
	6.7.4	Closure and Surface Reclamation	62
	6.7.5	Final Spillway	63
	6.7.6	Long Term Monitoring Requirements	63

DRAFT

	6.8	CONTINGENCY PLAN	63
	6.8.1	Scope of Contingency Plan	63
	6.8.2	Earthquake	64
	6.8.3	Extreme Runoff	66
	6.8.4	Power Failure	70
	6.8.5	Low Temperature	72
	6.8.6	Pipeline Leakage or Rupture	73
	6.8.7	Pipeline Blockage	74
	6.8.8	Avalanche and Debris Slide	75
	6.8.9	Fire	75
SECTION 7.0	CERTIFICATION		76

TABLES

Table 1.1	Design Basis and Operating Criteria
Table 1.2	Summary of Monitoring Requirements
Table 2.1	Reservoir Operating Criteria
Table 3.1	Maintenance Requirements
Table 4.1	Minimum Frequency of Inspections and Tests
Table 5.1	Emergency Situations and Responses
Table 6.1	Summary of Vibrating Wire Piezometers and Trigger Levels
Table 6.2	Trigger Levels for Survey Monuments

FIGURES

Figure 1.1	Project Location and Access Plan
Figure 1.2	Organization Chart
Figure 6.1	Depth/Area/Capacity/Filling Rate for Tailings Storage Facility
Figure 6.2	Tailings Area Filling Schedule and Staged Construction for 6,500,000 tpy Throughput
Figure 6.3	Groundwater Monitoring Well Location Plan

DRAFT

APPENDICES

Appendix A	Drawings
Appendix B	Annual Inspection Checklist
Appendix C	Sample Record Sheets
Appendix D	Communications Directory

DRAFT

Knight Piésold
CONSULTING

MOUNT POLLEY MINING CORPORATION
MOUNT POLLEY MINE
TAILINGS STORAGE FACILITY

OPERATION, MAINTENANCE AND SURVEILLANCE MANUAL FOR STAGE 3 (EL. 944) EMBANKMENT (REF. NO. 11162/13-3)

SECTION 1.0 - INTRODUCTION

1.1 SCOPE OF MANUAL

This Manual provides information and details of the general features, design basis, operating requirements, monitoring requirements, routine inspection and maintenance requirements, contingency procedures and closure requirements for the Mount Polley Mine Tailings Storage Facility and related structures.

The tailings embankment originally functioned as a water storage dam until the start of mining operations in early June 1997. The "Operation, Maintenance and Surveillance Manual for Stage 1a Embankment (El. 927 m), Ref. No. 1627/1" was first issued as a support document for impounding water. A revised manual, "Operation, Maintenance and Surveillance Manual for Stage 1b Embankment (El. 934), Ref. No. 10162/7-3" was issued as an updated version of the original manual and addressed the impoundment of mine tailings. This manual is now the second update and it incorporates revised procedures appropriate for changes in operating conditions such as cycloning of the bulk tailings stream and the incorporation of cycloned tailings underflow as embankment construction materials for the Main and Perimeter Embankments.

This document contains specific information such as the Stage 3 design drawings and depth-capacity and filling schedule for the Tailings Storage Facility and associated structures. Comprehensive checklists and procedures for operations, maintenance and annual inspections have been developed in conjunction with mine operating personnel. The manual also provides a brief overview of on-going construction requirements for

DRAFT

the tailings basin and embankments. The most current design drawings and filling schedule should be referred to during subsequent years of operations.

Additional Operating Manuals for components of related works and for equipment completed or supplied by others are also referenced in this Manual.

1.2 GENERAL FEATURES OF FACILITY

The Tailings Storage Facility provides permanent storage of the tailings produced from milling of copper and gold bearing ore. The principal requirements of the facility are:

- Reliable transport of the tailings from the Millsite to the Tailings Storage Facility.
- Collection and transport of runoff from waste rock storage areas to the Tailings Storage Facility.
- Permanent, secure and total confinement of all solid waste materials within an engineered Tailings Storage Facility.
- Control, collection and removal to the maximum practical extent of free draining liquids from the tailings.
- Provision of make-up water for mine start-up and as required during the winter months so as to facilitate a controlled water balance over the life of the project.
- Inclusion of monitoring features for all aspects of the Tailings Storage Facility to ensure performance goals are achieved.
- Protection of the regional groundwater and surface water flows, both during operations and in the long-term.
- Staged development to distribute capital expenditure over the life of the project.

The general components of the Tailings Storage Facility are summarized below:

- A pipeline system conveys the tailings slurry via gravity from the Millsite to the Tailings Storage Facility. The pipeline system includes a dropbox for directing

DRAFT

runoff into the system, an overflow or pressure relief pipeline for surge protection and a movable discharge section with spigot offtakes to distribute the tailings from the embankment crest in the cold winter months. In the warmer months, hydrocyclones are used to separate the tailings coarse fraction from the fine fraction. The fine material (overflow) is directed into the Tailings Storage Facility and the coarse material (underflow) is placed in the appropriate embankment construction zones or is stockpiled for later mechanical placement in the embankments.

- A make-up water supply system comprising an intake on Polley Lake, a pump and a pipeline, provides extra water to the Tailings Storage Facility.
- The Millsite Sump and Southeast Sediment Pond provide additional make-up water to the system. Millsite runoff is directed from the Millsite Sump into the tailings pipeline near the mill. Flows from the Southeast Sediment Pond enter the system at the reclaim booster pump station or at the tailings (T2) dropbox.
- Embankments constructed from earthfill and cycloned sand retain the tailings solids within the Tailings Storage Facility. The Main Embankment has a vertical chimney drain to El. 929m, with a collector (longitudinal) drain and three outlet drains. The cycloned sand zones also form part of the overall drainage system. The Main and Perimeter Embankments incorporate interconnected upstream toe drains, complete with redundant outlet drainpipes. The toe drains serve as low-level outlets that improve the performance of the structure in terms of safety and controlled seepage.
- A low permeability basin liner (natural and constructed) provides containment of process fluids within the Tailings storage Facility and minimizes the potential for seepage through the tailings basin soils.
- A foundation drainage system is included below the Main Embankment to prevent the build-up of any pressures in foundation materials and to collect any seepage from the base of the Tailings Storage Facility.
- Seepage collection ponds excavated in low permeability soils downstream of the embankments store seepage and local runoff that is pumped back into the Tailings Storage Facility.

DRAFT

- Instrumentation is placed in the embankment foundations, fill and drains (including vibrating wire piezometers and survey monuments) to monitor the performance of the Tailings Storage Facility.
- A reclaim water system, including a barge mounted pump station in an excavated channel, a booster pump station and a pipeline, provides process water to the mill.
- A system of monitoring wells is installed around the Tailings Storage Facility for groundwater quality monitoring.

Stage 3 design drawings are included in Appendix A.

1.3 DESIGN BASIS

The Tailings Storage Facility was designed using appropriate and conservative design parameters from hazard classification, seismic data, hydrologic studies and geotechnical site investigations. The following basic operating parameters were provided by the Mount Polley Mining Corporation prior to the designing of the facility:

- Tailings Production Rate – 20,000 tonnes/day
- Solids Content from Discharge at Concentrator – 35 percent
- Total Mine Reserves – 81.3 million tonnes

A summary of the design basis and operating criteria for the Tailings Storage Facility is included on Table 1.1.

1.4 ACCESS INFORMATION

The Mount Polley Mine is located in central British Columbia, approximately 60 km northeast of Williams Lake. The main access route is via the paved highway to Likely. The turn to the Mine is located approximately 1.5 km east of Morehead Lake. The Mine is located a further 11 km to the southeast, on the Bootjack Lake Forest Service Road. The location of the Mine and access roads are shown on Figure 1.1.

DRAFT

Access to the Tailings Storage Facility is provided along the road for the tailings and reclaim pipelines. The road starts at the Millsite. The Main Embankment is located approximately 5 km southeast of the Mine.

The Tailings Storage Facility can also be accessed from the Likely Highway by taking the Gavin Lake Forest Service Road. The turnoff for this road is located approximately 14 km south of Morehead Lake. The Main Embankment is located at approximately km 16 on this road. The Gavin Lake Forest Service Road leads to Likely.

1.5 ASSIGNMENT OF RESPONSIBILITY

The administrative structure for the operation, maintenance and surveillance of the Tailings Storage Facility and related structures is illustrated by the organizational flow chart shown on Figure 1.2.

The responsibility for the day-to-day operation, maintenance and surveillance of the facility lies with the Dam Co-ordinator. During an emergency, any decisions regarding the procedures to be carried are the responsibility of the Dam Co-ordinator. In the event that the Dam Co-ordinator is not available, the responsibility is then delegated to the Dam Operator.

The Dam Co-ordinator's responsibilities include the preparation of reports covering all aspects of the operation, maintenance and surveillance of the facility. These will serve as a permanent record of operations that may then be available to other persons operating the facility, the Design Engineer or regulatory authorities. The reports shall include all records of maintenance, inspection and monitoring and shall be kept in a centralized location.

1.6 INSPECTION FREQUENCIES AND COMMUNICATION

The Dam Co-ordinator is responsible for organizing an Annual Inspection and Report on the condition of the Tailings Storage Facility. The Dam Operator, under the direction of the Dam Co-ordinator, is required to conduct a daily visual inspection of the facility. This is in addition to the requirements for surveillance described in Section

DRAFT

4.0. The annual inspection of the entire Tailings Storage Facility will be completed by a suitably qualified Engineer.

Communication are achieved by radio contact from the Millsite to the Tailings Storage Facility. Telephones are available for off-site communication at the Millsite.

A list of all parties and organizations involved in both the normal and emergency operation of the Tailings Storage Facility is included in Appendix D.

1.7 OTHER AGENCIES

Other relevant agencies involved in the operation, maintenance and surveillance of the Tailings Storage Facility include the Ministry of Energy and Mines (MEM), Ministry of Environment Lands and Parks (MELP), Ministry of Forests (MOF) and Department of Fisheries and Oceans (DFO).

1.8 TRAINING SCHEDULES

Training programs are required for the Dam Co-ordinator and Dam Operators or other person(s) involved in the operation, inspection and surveillance of the Tailings Storage Facility. The training program shall be conducted by a qualified Professional Engineer familiar with the design, operation, maintenance and inspection of all civil and mechanical works associated with the facility.

A refresher course shall be conducted once per year during the annual inspection by the Professional Engineer for all persons involved in the operation, maintenance and surveillance of the Tailings Storage Facility.

1.9 DATA REPORTING

A suitably qualified Professional Engineer shall provide Annual Inspection Reports for the Tailings Storage Facility. These reports shall be filed both at the Mount Polley Mine Site and with MELP, Water Management Branch. The Dam Co-ordinator and Dam Operators shall maintain a daily log of all visual inspections and readings, which

DRAFT

shall be filed in the office at the Mine in a central location. This information should be available at all times for review by Government Agencies or other relevant parties.

Recommended monitoring requirements for each of the components of the system are discussed in this manual and are summarized on Table 1.2. The overall monitoring program will be subject to operating permits issued by regulatory agencies. Detailed procedures and checklists are included in this manual. The monitoring records shall be filed on-site in an organized manner to allow immediate access.

An annual inspection checklist "Guidelines for Annual Reports" is included in Appendix B.

Water quality monitoring for both groundwater and surface water sources is also required. Water quality monitoring and reporting are completed by the Mount Polley Environmental Department.

1.10 OPERATING LOG

An Operating Log shall be maintained for each of the components of the Tailings Storage Facility and related structures, including the following:

- Southeast Sediment Pond and Pipeline
- Polley Lake Pump Station and Pipeline
- Tailings Pipeline and Discharge Components
- Reclaim Pipeline and Booster Pump Station
- Main Embankment, including the Foundation Drain System and Seepage Collection Pond
- Perimeter Embankment and Seepage Collection Pond
- South Embankment

The log should contain a chronological record of all events in order to provide a continuing record of the operating activities, as well as to provide information on possible equipment problems or the development of unusual conditions for each of the

DRAFT

components. The logged record shall be maintained by the Dam Co-ordinator or designated operating personnel.

1.11 PUBLIC SAFETY

It is the duty of the person(s) operating the Tailings Storage Facility to report to the Dam Co-ordinator any unsafe working conditions or unsafe conditions relating to the operation of the facility.

Public access shall not be permitted to the Tailings Storage Facility from the Mine and Millsite. However, the Bootjack-Morehead Connector is a forestry road that passes along the downstream side of the Main Embankment Seepage Collection Pond. In the event that emergency services are required, the closest medical emergency station is at the Millsite. Emergencies requiring medical evacuation will be by vehicle or helicopter to Williams Lake. Emergency procedures and protocol shall follow the procedures for the Millsite, as prescribed by the Mount Polley Mining Corporation Emergency Preparedness Plan (EPP). The closest police station is in Williams Lake. Details of the medical and emergency facilities are included in the Communications Directory in Appendix D.

1.12 RESTRICTED AREAS

Certain areas are restricted to authorized workers and include, but may not be limited to, the following:

- T2 Tailings Dropbox
- Reclaim Pump Station
- Southeast Sediment Pond Sump
- Polley Lake Pump Station
- Main, Perimeter and South Embankments
- Main and Perimeter Embankment Drain Monitoring Sumps
- Main and Perimeter Embankment Seepage and Sediment Collection Ponds and Seepage Recycle Sumps
- Reclaim Barge Pump Station

DRAFT

It is the responsibility of the Dam Co-ordinator to post restricted access signs in the appropriate areas, when and as required.

1.13 SECURITY PLANS

There are no security plans at present other than those required for the Emergency Preparedness Plan, as discussed in Section 5.0.

1.14 DISTRIBUTION OF MANUAL

The following is the distribution list for the Operation, Maintenance and Surveillance Manual for Stage 3 Embankment (El. 944) and Ongoing:

- One (1) copy for Mount Polley Mining Corporation (Vancouver office)
- One (1) copy for Dam Co-ordinator's office
- One (1) copy for Dam Operator (Mill Shifter's Office)
- Three (3) copies for Comptroller of Water Rights
- One (1) copy for the Regional Water Manager (Williams Lake)
- Two (2) copies for the Director of the Provincial Emergency Program (P.E.P.)
- One (1) copy for the MELP, Dam Safety Engineer
- One (1) copy for the MEM Geotechnical Manager
- One (1) copy for Design Engineer of Record.

Mount Polley Mining Corporation is responsible for maintaining the record of the location of each copy of the Manual and to ensure all copies are updated as and when required.

1.15 REVISIONS TO MANUAL

Reviews of the Manual will be conducted on an annual basis as per the Emergency Plan outlined in Section 5.0 and as part of the annual inspection for the Tailings Storage Facility. Revisions to the Manual will be made as and when required to reflect current operating, maintenance and surveillance practices

DRAFT

1.16 REFERENCE DOCUMENTS

The following Knight Piésold documents provide background information to support this report and are available for review:

1) Imperial Metals Corp. Mt. Polley Project, Report on Geotechnical Investigations and Design of Open Pit, Waste Dumps and Tailings Storage Facility, February 19, 1990.

2) Imperial Metals Corp. Mt. Polley Project, Stage I Environmental and Socioeconomic Impact Assessment, Response to Comments by the Agencies, January 16,1991

3) Imperial Metals Corp. Mt. Polley Project, Report on 1995 Geotechnical Investigations for Mill Site and Tailings Storage Facility, Ref. No. 1623/1, March 14, 1995.

4) Imperial Metals Corp. Mt. Polley Project, Report on Project Water Management, Ref. No. 1624/1, February 6, 1995.

5) Imperial Metals Corp. Mt. Polley Project, Groundwater Monitoring Program, Ref. No. 1624/2, June 3, 1996.

6) Imperial Metals Corp. Mt. Polley Project, Tailings Storage Facility, Design Report, Ref. No. 1625/1, May 26, 1995.

7) Imperial Metals Corp. Mt. Polley Project, Tailings Storage Facility, Site Inspection Manual, Ref. No. 1625/2, May 26, 1995.

8) Imperial Metals Corp. Mt. Polley Project, Tailings Storage Facility and Ancillary Works, Part 10 - Technical Specifications, Ref. No. 1625/3 DRAFT, May 25, 1996.

9) Imperial Metals Corp. Mt. Polley Project, Manual on Sampling and Handling Guidelines for Determination of Groundwater Quality, Ref. No. 1625/5, May 8, 1997.

10) Imperial Metals Corp. Mt. Polley Project, Response to Review Comments on Tailings Embankment Design, Ref. No. 1625/6, January 25, 1996.

DRAFT

11) Imperial Metals Corp. Mt. Polley Project, Response to Review Comments on Groundwater Monitoring Program, Ref. No. 1625/7, September 12, 1996.

12) Imperial Metals Corp. Mt. Polley Project, Requirements and Specifications for the 1996 Groundwater Monitoring Program, Ref. No. 1625/8, September 12, 1996.

13) Mount Polley Mining Corporation, Mount Polley Project, Tailings Storage Facility, Operation, Maintenance and Surveillance Manual for Stage 1a Embankment (El. 927 m), Ref. No. 1627/1, March 11, 1997.

14) Mount Polley Mining Corporation, Mount Polley Project, Tailings Storage Facility, Updated Design Report, Ref. No. 1627/2, June 6, 1997.

15) Mount Polley Mining Corporation, Mount Polley Project, T.S.F. Operation, Maintenance and Surveillance Manual for Stage Ib Embankment (El. 934 m), Ref. No. 10162/7-3, November 24 1997.

16) Mount Polley Mining Corporation, Mount Polley Project, Tailings Storage Facility and Ancillary Features, May 1, 1997 Site Inspection, Ref. No. 1627/4, June 3 1997.

17) Mount Polley Mining Corporation, Mount Polley Project, Report on Stage Ia/Ib Construction, Ref. No. 10162/7-5, August 14 1997.

18) Imperial Metals Corp. Mt. Polley Project, Report on Geotechnical Investigations and Design of Open Pits and Waste Dumps, Ref. No. 1628/1, July 5, 1996.

19) Imperial Metals Corp. Mt. Polley Project, Specification for Drilling, Monitoring Well Installations and Related Services, Ref. No. 1628/3, September 18, 1996.

20) Mount Polley Mining Corporation, Mount Polley Project, 1996 Groundwater Monitoring Well Installation Program, Ref. No. 1628/4, February 7, 1997.

21) Mount Polley Mining Corporation, Mount Polley Project, Polley Lake Pumping System, Ref. No. 1628/5, February 19, 1997.

22) Mount Polley Mining Corporation, Mount Polley Project, Tender Documents for Stage 2A Tailings Facility Construction, Ref. No. 10162/9-1, November 11 1997.

DRAFT

23) Mount Polley Mining Corporation, Mount Polley Project, Stage 2A Tailings Facility Construction Select Excerpts from Reference Information, Ref. No. 10162/9-2, November 6 1997.

24) Mount Polley Mining Corporation, Mount Polley Project, Report on On-going Construction Requirements, Ref. No. 10162/9-3, December 2 1997.

25) Mount Polley Mining Corporation, Mount Polley Project, Contact Documents for Stage 2A Tailings Facility Construction, Ref. No. 10162/9-4, January 29 1998.

26) Mount Polley Mining Corporation, Mount Polley Project, 1998 Annual Inspection Report, Ref. No. 10162/9-5, June 26 1998.

27) Mount Polley Mining Corporation, Mount Polley Project, Report on 1998 Construction and Annual Inspection, Ref. No. 11162/10-1, June 16 1999.

28) Mount Polley Mining Corporation, Mount Polley Project, Evaluation of Cycloned Tailings Embankment Construction, Ref. No. 11162/11-1, Rev 0, June 16 1999.

29) Mount Polley Mining Corporation, Mount Polley Project, Report on Cycloned Sand Construction of Stage 3 and On-going Stages of the T.S.F., Ref. No. 11162/12-2, Rev 0, Volumes I & II, December 13 1999.

30) Addendum To Report On Cycloned Sand Construction Of Stage 3 And On-Going Stages Of The Tailings Storage Facility, Ref. No. 11162/13-4), April 20, 2000.

DRAFT

SECTION 2.0 - RESERVOIR OPERATION

2.1 GENERAL

This section specifies the operating procedures and restrictions that must be followed for the operation of the Tailings Storage Facility reservoir. The operating criteria are summarized on Table 2.1.

The consequence of failure of the embankment is considered to be significant due to the loss of storage, potential damage to downstream structures and possible impact on fisheries habitat due to erosion and siltation. Failure of the embankment, however, would not represent a significant threat to human life or property.

2.2 RESERVOIR LEVELS AND FLOOD OPERATION

(a) Freeboard and Reservoir Levels

The maximum operating and flood levels for the facility are shown on Table 2.1. Adequate freeboard will be maintained so that the design storm event (24 hour PMP) can be contained within the facility. In addition, one metre of freeboard will be maintained above the PMP level for wave run-up (see Section 6.1).

(b) Normal Operation

During normal operation of the facility, tailings and surface runoff from the tailings area catchment will be impounded in the facility. Make-up water originating from the Southeast Sediment Pond and Millsite Sump will flow through the tailings line via gravity and will be discharged into the facility. Additional make-up water from the Polley Lake Pump Station will be pumped to the facility through the pipeline that crosses the tailings access road west of the Perimeter Embankment.

DRAFT

(c) Flood Operation

No special flood operating procedures are required for the Tailings Storage Facility because there is sufficient capacity to store the design storm event within the facility at all times.

Provisions are included at the Tailings Storage Facility for storing the 24-hour Probable Maximum Precipitation (PMP) event for all stages of operations. The crest elevation includes an allowance to store up to 2.5 million cubic metres of make-up water in the facility, while maintaining one metre of freeboard for wave run-up.

2.3 RESERVOIR FILLING AND DRAWDOWN

There are no restrictions on the filling of the facility with respect to dam safety. Also, there are no special provisions for emergency drawdown within the impoundment. In the event of an unusual or unexpected requirement for drawdown of the pond water, drawdown will be facilitated by pumping, using the reclaim barge and/or the Polley Lake Pump that could be temporarily relocated to the Tailings Storage Facility.

2.4 DISCHARGE FACILITIES

No discharge facilities have been incorporated in the design because the freeboard required to store the design storm event will be maintained within the facility at all times.

DRAFT

SECTION 3.0 - MAINTENANCE

3.1 GENERAL

Regularly scheduled maintenance will ensure the serviceability and integrity of the Tailings Storage Facility components. Maintenance requirements are also defined by inspections or by unsatisfactory performance.

3.2 MAINTENANCE REQUIREMENTS

The maintenance requirements for the Tailings Storage Facility, including all associated facilities and works, are the responsibility of Mount Polley Mining Corporation.

The following items require regular inspection and maintenance to ensure on-going safety and operation of the system:

- Millsite Sump, including decant tower and pipework.
- Runoff collection ditch at base of the waste rock storage areas, including removal of slough or debris material.
- Southeast Sediment Pond, including decant tower and pipework.
- Pipe Containment Channel (containing the Tailings and Reclaim pipelines).
- Tailings Pipeline, including all components of the discharge pipeworks and the T2 Dropbox and associated pipework.
- Reclaim pipeline, Barge and Booster Pump Station, including all valves and pipework.
- Polley Lake Pump Station, including intake, pumps, flow monitoring equipment and pipeline.
- Seepage and sediment collection ponds and pumping systems.
- Cycloned Sand water management berms, ditches and ponds.

DRAFT

Other items which require periodic maintenance, as determined by inspection and/or performance include:

- Survey control points.
- Surface movement monuments.
- Piezometers and terminal panels.
- Drain Monitoring Sumps.
- Dam slopes, including removal of debris and vegetation.
- Seepage Collection Pond slopes.
- Communication system.

A list of items requiring maintenance for dam safety is included in Table 3.1. Records shall be kept of all maintenance activities in accordance with this Manual so that they may be reviewed during each Annual Inspection or as required at any time during operations.

DRAFT

SECTION 4.0 - SURVEILLANCE

4.1 GENERAL

The continuing satisfactory and safe performance of the Tailings Storage Facility is determined by surveillance that includes detailed monitoring, inspection and testing. All components of the facility are designed for the required design loading conditions and as per the design criteria, relating to the hydrologic parameters and the flow control/release requirements and commitments.

The following subsections discuss the general requirements for the surveillance of the embankments and their related components, including inspections, monitoring, evaluation and correction of any deficiencies for the safe and effective operation of the facility. Detailed inspection and monitoring requirements for each of the components of the Tailings Storage Facility are presented in Section 6.0.

4.2 INSPECTIONS AND TESTS

4.2.1 General

To ensure the serviceability and integrity of the Tailings Storage Facility, all components required for the proper operation and monitoring of the embankments and associated structures shall be regularly inspected. The information obtained during the inspections is to be retained and filed for use in assessing the current condition of the facilities; to detect any deterioration or signs of deterioration; and to determine a program of regular or special maintenance and repair. If at any time an inspection reveals that structures or equipment are inoperative or in a condition that could jeopardize the safety or continued operation of the facility, prompt repair or replacement shall be carried out.

All components essential to the safe operation or to the continued monitoring of the facility shall be operated and/or tested on a regular basis to demonstrate their serviceability and reliability.

DRAFT

The type and scope of inspections and testing requirements for each component of the Tailings Storage Facility are outlined in the following subsections. The minimum frequency of inspections and tests is specified in Table 4.1. The frequency of monitoring for each component is presented on Table 1.2, as previously discussed.

4.2.2 Routine Inspections

Routine inspections provide, to the maximum extent practical, continuous surveillance of the facility. The inspections shall be carried out (under the direction of the Dam Co-ordinator) by a Dam Operator with sufficient training, experience and demonstrated understanding of the operation of the facilities to recognize abnormal and/or potentially dangerous conditions with respect to dam safety. The Dam Operator shall have a working knowledge of the operational and design features of the system relevant to the inspection requirements.

Routine Inspection Checklists are to be used to ensure that all appropriate observations are made and abnormal conditions reported. Photographs should be taken of any abnormal conditions and filed with the inspection reports.

An Inspection Log Form is to be developed and kept on-site at the office of the Dam Co-ordinator for routine inspections. The Log is to be signed by the Dam Operator following each inspection. If abnormal conditions are observed, it is the responsibility of the Dam Operator to identify the nature of the conditions in the Inspection Log and submit the completed checklist describing the conditions in detail to the Dam Co-ordinator. A copy of the checklist is to be sent to the Design Engineer and the Geotechnical Branch of the Ministry of Energy and Mines. The Dam Co-ordinator shall take appropriate action to resolve any abnormal conditions. Any changes or defects that could affect the safety of the facility are to be promptly reported to the Design Engineer, as outlined in the Emergency Preparedness Plan (EPP).

DRAFT

4.2.3 Intermediate Inspections

(i) Civil and Structural

Inspections of the civil and structural works are to be carried out on an annual basis, or as required if abnormal conditions or a particular hazard arises. The inspections shall be performed according to the schedules listed in Table 4.1.

The extent and detail of the Civil Inspections shall be sufficient to assess the integrity and performance of the civil and structural works and shall be carried out by a suitably qualified person. Civil Inspection Checklists are to be completed with appropriate comments and descriptions.

An inspection report summarizing the results of the inspection shall be prepared.

(ii) Mechanical Equipment

Intermediate inspections shall be performed for all the mechanical equipment according to the schedule listed in Table 4.1. Equipment Inspection Checklists are to be used to ensure that appropriate observations are made and abnormal conditions reported.

The extent and detail of the Equipment Inspections shall be sufficient to assess the integrity and performance of the mechanical equipment and shall be carried out by a suitably qualified person. Intermediate Equipment Inspection Checklists are to be completed with appropriate comments and descriptions.

An inspection report summarizing the results of the inspection shall be prepared.

DRAFT

4.2.4 Equipment Tests

(i) Pumps:

Any pumps (including backups) shall be operated or tested on a regular basis.

(ii) Valves:

Valves should be tested twice per year, or as required, to ensure effective operation.

4.2.5 Special Inspections

Special inspections were required during initial reservoir filling and may be required following a major flood, earthquake or other event that may have affected the operation of the equipment or damaged the facilities. Special inspections may also be required to investigate a problem noted during any inspection or review, or to comply with EPP requirements.

4.3 INSTRUMENTATION

Instrumentation is installed at the Tailings Storage Facility to monitor the performance of the embankment and associated structures, and to detect abnormal conditions relevant to dam safety. The instrumentation is to be maintained in a serviceable and operational state and includes the following:

- Piezometers in the foundation soils, embankment drains and embankment fill zones and in tailings, to monitor pore water pressures.
- Individual outlet pipes for the Main Embankment foundation drains for measuring flows and to enable the collection of water quality samples.
- Surface movement monuments to monitor vertical and lateral movement of the earthfill embankments.

DRAFT

Instrumentation records, and any additions or modifications to the instrumentation are the responsibility of the Dam Co-ordinator. All instrumentation is to be clearly marked and protected to prevent damage, as shown on the Drawings. The frequency of readings for the instrumentation is shown on Table 1.2.

4.4 INCREASED LEVELS OF SURVEILLANCE

Increased levels of surveillance are required during the construction periods, during initial filling, or during or following any major flood, earthquake, or other event that may affect the operation of the facility. Increased site surveillance shall also be initiated whenever immediate on-site observation is required for the following:

- To rapidly evaluate conditions and to initiate operational or remedial measures to ensure the safety of the facility.
- To implement the EPP.
- To monitor unusual operating conditions for future assessments.

The Design Engineer of Record shall be consulted and/or advised in the event that such circumstances arise requiring increased surveillance. The level of increased surveillance shall then be determined in direct consultation with the Design Engineer. In any case, increased site surveillance shall be maintained until the condition posing the safety concern has been assessed and it has been determined that there is no longer a danger to the facility.

Increased site surveillance will be required, but not limited to, the following conditions or circumstances:

(i) During Initial Reservoir Filling (previously completed)

- To review the preparedness for impounding water.

(ii) Floods

- Reservoir levels exceeding the specified maximum flood levels.

DRAFT

- Excessive rise in the reservoir levels.

(iii) Earthquake

- Immediately following a major earthquake.

(iv) Unusual Observations

- Abnormally high piezometric levels.
- Settlement, cracks and/or slumping of the embankment.
- Sinkholes along slope(s) of the embankment.
- Failure or substantial movement of reservoir slopes.
- Slope failure or seepage flows from the embankment slopes.
- Increased or contaminated flow from foundation drain outlet pipes.
- Damage to any component of the facility.

DRAFT

SECTION 5.0 - EMERGENCY PLANNING AND COMMUNICATIONS DIRECTORY

5.1 GENERAL

The Emergency Preparedness Plan (EPP) facilitates mobilization of manpower and equipment, and allows emergency officials to establish warning and evacuation procedures for the protection of downstream facilities.

Due to the remote location of the Mount Polley Mine, there is no increased potential for loss of life to the public in the event of failure of the Tailings Storage Facility. As such, the primary intent of the EPP is to minimize environmental impacts associated with failure of the facility and to minimize costs for remediation during operations. At closure the tailings surface will be revegetated and a wetlands area will be constructed, with a spillway to re-establish original flows.

5.2 EMERGENCY PLAN

The operation of the Tailings Storage Facility is the responsibility of the Dam Co-ordinator. During an emergency any decisions regarding the procedures to be carried out for the facility will be made by the Dam Co-ordinator. In the event that the Dam Co-ordinator is not available, responsibility is then delegated to the Dam Operator, General Foreman or other Supervisory Personnel.

The Dam Co-ordinator shall be responsible for briefing the Dam Operator, General Foreman and all Supervisory Personnel on the EPP, including relevant emergency procedures and protocol. The EPP shall be distributed as follows:

- One (1) copy for the Dam Co-ordinator's Office
- One (1) copy for the Office (near office radio and telephone)
- One (1) copy for the Dam Operator (Mill Shifter's Office)
- Three (3) copies for the Comptroller of Water Rights
- One (1) copy for the Regional Water Manager (Williams Lake, B.C.)
- Two (2) copies for the Director of the EPP

DRAFT

- One (1) copy for the Manager of MELP, Water Branch
- One (1) copy for the Design Engineer of Record.

5.3 EMERGENCY SITUATIONS AND RESPONSES

The emergency situations and corresponding responses and action measures to be taken for the Tailings Storage Facility are listed in Table 5.1. This list is subject to change and should be reviewed periodically.

5.4 COMMUNICATION SYSTEMS AND DIRECTORIES

The communication systems include a listing of all relevant Government Ministries, EPP Personnel, Police authorities and emergency assistance agencies that the Dam Co-ordinator and his supervisory office may need to contact in the event of an emergency. The Communications Directory is included in Appendix D.

5.5 CONSTRUCTION EQUIPMENT AND MATERIALS

Construction equipment will be available at the Mine, approximately 5 km from the Tailings Storage Facility. The equipment will include, but will not be limited to, an excavator, a grader and a bulldozer. The equipment will be used to repair any slumped or scoured areas along embankment slopes, or to construct key cuts, drains or fills, etc.

Materials will be available both at the Tailings Storage Facility and at the Mine for use in repairing or remediation of any damaged areas. Local stockpiles of riprap, glacial till and sand and gravel will be available for periodic maintenance or for emergency use. Supplies of cement, plastic sheeting, filter fabric, miscellaneous pipework and spare parts etc. will be available at the Mine.

The tailings solids can also be used for mitigating and controlling seepage losses through foundation materials or fill zones if necessary.

DRAFT

5.6 REVIEWS

A review of the Emergency Preparedness Plan shall be administered by the Dam Co-ordinator on an annual basis as follows:

- Names and phone numbers of designated officials shall be verified and updated as required.
- All relevant personnel shall be given a refresher briefing on the EPP and routine inspection procedures, particularly with respect to any changes to the EPP or the inspection procedures.
- The EPP shall be reviewed for adequacy following each inspection by the Ministry of Environment, Lands and Parks, Water Management Branch (once every 2 years, or as required).

DRAFT

SECTION 6.0 - TAILINGS MANAGEMENT SYSTEM COMPONENTS

6.1 TAILINGS BASIN

6.1.1 General Description

The tailings basin is located approximately 5 km southeast of the Mine. The basin provides containment of tailings by embankments on three sides and by natural topography on the northwest side. Containment of process water within the basin is enhanced by a low permeability glacial till liner that typically has a permeability less than 1×10^{-6} cm/sec.

Clearing, grubbing and topsoil stripping are completed in areas affected by construction, such as embankment footprints, seepage collection ponds, basin liners, borrow areas, reclaim barge channel and road alignments.

6.1.2 Basin Filling Characteristics

The storage characteristics and filling rate for the tailings basin are shown on Figure 6.1. The projected rate at which the basin will fill, combined with storage provisions for make-up and storm water determine the rate of rise for the embankment. The anticipated filling schedule and staged construction sequence is shown on Figure 6.2.

Adjustments to the basin filling curve may be required due to variation between actual and projected mill throughput rates, in-situ tailings density, and incorporation of cyclone underflow in embankment fill. Any adjustments may change the rate of rise for the tailings and embankments. The tailings deposition strategy is described in Section 6.2.

6.1.3 Basin Liners

Most of the tailings basin is blanketed by naturally occurring low permeability glacial till that functions as an in-situ soil liner. Some areas near the Main Embankment have a thin surficial glacial till cover (less than 2 metres) and are

DRAFT

underlain by glaciofluvial/glaciolacustrine sediments. The Lower and Upper Basin liners were constructed in these areas using imported glacial till which was placed and compacted in lifts. Additional material was placed as a frost protection layer on any areas that were likely to be exposed to freezing temperatures over the winter.

6.1.4 Monitoring Requirements

The tailings basin filling rate (tailings and water) is an important factor when evaluating the performance of the facility. The filling rate is also used as the basis for on-going design of future embankment raises. The pond elevation, depth, area and volume must be closely monitored for the following reasons:

- To ensure that there is a sufficient volume of water available as make-up water while the pond is frozen and precipitation is at a minimum.
- To ensure that the maximum make-up water volume (2.5 million cubic metres) is not exceeded so that there is adequate storage capacity for tailings until construction of the next embankment raise.
- To enable monitoring of the supernatant pond depth/area/volume so that tailings characteristics such as dry density can be determined.
- To monitor water recoveries.
- To enable the correlation of the pond level with other data, such as the piezometer pressures and drain flow quantities.

The filling rate can be monitored using the pond level and the depth/area/capacity curve for the facility. The pond level at the reclaim barge should be recorded on a daily basis on the tailings operator's daily record sheet. The volume of the supernatant pond should be determined semi-annually, once before freeze-up and once before starting to pump water from Polley Lake. The volume can be determined by sounding the pond depths from a boat.

DRAFT

6.1.5 On-going Construction

Additional clearing, grubbing and topsoil stripping will be required for areas affected by future construction programs. Successful procedures established during initial construction should be followed during future work programs.

The Basin Liners were delineated from exploration trenches. Additional areas that require a basin liner may be identified during future construction programs, as the basin expands. Exploration trenches should also be used to delineate these areas and the liner materials should be placed as per the Drawings. All exploration trenches must be backfilled in compacted lifts using low permeability soils. A mound of glacial till with a minimum thickness of 750 mm should be placed above all backfilled exploration trenches. Additional material for a frost protection layer will be required if any liner areas will be exposed over the winter. Detailed design drawings and Specifications will be required for each on-going construction phase.

6.2 TAILINGS DEPOSITION

6.2.1 Deposition Strategy

The main objectives of the tailings deposition strategy are:

- To maximize the storage capacity of the facility.
- To maintain the supernatant pond in the area of the reclaim barge so as to maximize the amount of clean process water available for reclaim.
- To establish free draining tailings beaches adjacent to the embankments during the winter season to facilitate future embankment raises and to enhance embankment stability.
- To incorporate cycloned sand in the embankments, as per the embankment designs.
- To produce cycloned sand stockpiles for incorporation in the embankments, as per the embankment designs.

DRAFT

These objectives will be met in the winter by discharging tailings through a series of valved offtakes (spigots) that will distribute the total flow over a significant length. Tailings may also be discharged from a single point. Sequential rotation of tailings discharge will be performed over the full length of the embankments. This will be accomplished by regularly relocating the discharge point in order to allow inactive areas of the tailings beach to partially dry and consolidate. Low flows and sanding in the tailings pipeline will be avoided because all of the discharge will be from a small group of closely spaced embankment offtakes located at the end of the pipeline.

During the warmer (non-freezing) months the offtakes will be connected to a series of cyclones to utilize all of the tailings for the production of cycloned sand for embankment fill material according to the embankment designs. Any coarse material that cannot be hydraulically placed in the embankments will be stockpiled and later mechanically placed as required in order to complete the seasonal construction objectives.

The Tailings Distribution System is shown on Drawing Nos. 1625.218, 219 and 1625.222 to 228. The Mine continually modifies the Tailings Distribution System to suit the deposition strategy, and the Drawings may not reflect the current configuration.

6.2.2 Tailings Pipework

6.2.2.1 General

Pipework for the Tailings Storage Facility has been designed for an average annual throughput rate of 20,000 tonnes/day at a solids content of 35 percent, together with up to 500 l/sec of surface runoff from the Millsite Sump and Southeast Sediment Pond.

Tailings are delivered to the Tailings Storage Facility by gravity in the form of a slurry from the concentrator through a single HDPE pipeline. HDPE pipe can accommodate requirements for changes in the length, line and grade of the

DRAFT

pipeline route and has good abrasion resistance and low installation cost. The pipeline system includes a dropbox for directing runoff into the system and an overflow or pressure relief pipeline for surge protection.

The tailings pipeline is approximately 7000 metres long. It is located in the pipe containment channel adjacent to the tailings access road and along the inside crest of the Perimeter and Main Embankments. The tailings pipeline has a variable downhill slope which ensures drainage, with maximum and minimum grades of 8.0 and 0.5 percent, respectively. The pipeline will be flat (0 percent) from the start of the Perimeter Embankment to the end of the Main Embankment. The pipeline includes the following components:

- Approximately 200 metres of 30 inch (762 mm) DR15.5 HDPE exiting the concentrator.
- Approximately 1,420 metres of 22 inch (559 mm) DR17 HDPE to the T2 Dropbox.
- 80 metres of 30 inch (762 mm) DR15.5 HDPE exiting the T2 Dropbox.
- Approximately 5,300 metres of 24 inch (610 mm) DR15.5 HDPE to the end of the Main Embankment.

On-going monitoring of the tailings pipework is required and modifications will be implemented as necessary.

6.2.2.2 Spigot System

Bulk tailings discharge into the facility is controlled by two Mark 1 (M1) dump valves. The upper dump valve is located at the northwest corner of the impoundment and the lower dump valve is located at the intersection of the Main and Perimeter Embankments, at the southeast corner of the impoundment. The dump valves consist of 24 inch, rubber lined steel tees that can be isolated by two, 24 inch knife gate valves.

Movable sections of 24 inch HDPE pipe are attached to the dump valves to allow single point discharge from the crest of the Main and Perimeter

DRAFT

Embankments. Tailings may also be discharged through 6 inch HDPE spigots attached to movable sections of pipe. Discharge sections may be separated by knife gate valves.

The pipeline is restrained from excessive movement by anchor blocks, pipe clamps, guide posts and local burial. The locations and number of restraints were determined during installation and can be modified as required, based on operating experience.

6.2.2.3 Cyclone System

In the warmer months, tailings will be discharged at various locations around the Tailings Storage Facility using cyclones to the greatest degree possible, as discussed below.

- Cycloned Sand Stockpiles – Cyclones will be set up and operated in selected areas within the Tailings Storage Facility to establish stockpiles of cyclone underflow sand. Each stockpile area will be constructed with an onsurface drainage system. This will be designed to enhance dewatering of the deposited sands. The cyclone overflow will be directed away from the stockpiles and into the tailings pond. Dewatered cycloned sand material from the stockpiles may be placed mechanically in the tailings embankments as a fill material if it meets all requirements of the Technical Specifications.

- Cycloned Sand Embankment Construction – Cyclones will be used to construct the tailings embankments by hydraulic placement of the cyclone underflow material (direct discharge) into certain zones of the embankments. Before cycloning into these zones, all related water management facilities will be constructed. These may include containment berms, drainage berms along the prepared surfaces, ditches and sedimentation ponds. The cycloned overflow and accumulated water will be directed into the tailings pond.

DRAFT

6.2.3 Operating Procedures

6.2.3.1 Tailings Pipeline and T2 Dropbox

The T2 Dropbox has been modified to improve flow in the tailings pipeline. The tailings pipeline now bypasses the T2 Dropbox. However, the pipeline is connected to the dropbox by a bifurcation located downstream of the dropbox. The remaining functions of the Dropbox are surge protection and overflow control, and provision of an inlet for surface runoff, as discussed in Section 6.2.3.2. An additional pressure relief pipeline has been installed up-gradient of the T2 Dropbox. This pipeline acts as a control for pressure in the tailings pipeline. It will allow a portion of the tailings stream to flow into the tailings and reclaim water pipe containment channel and thereby limit the maximum pressure in the tailings pipeline.

The tailings pipeline and T2 Dropbox operate without external adjustments.

6.2.3.2 Surface Runoff

Additional water from surface runoff is collected at two locations. The first source is runoff from the Millsite. Water collected in the Millsite Sump is pumped into the 30-inch tailings pipeline adjacent to the Millsite Sump. In the future, water may be directed into the 22-inch tailings line through a Tee that has been installed just downstream of the transition from the 30-inch DR 15.5 to 22-inch DR 17 HDPE pipe.

The second source of surface runoff water is the Southeast Sediment Pond. Runoff from the waste rock storage areas flows into this pond and is then directed to the T2 Dropbox or the Reclaim Booster Pump Station Sump.

Operation of the Millsite Sump and Southeast Sediment Pond is discussed in Section 6.6.

DRAFT

6.2.3.3 Bulk Tailings Discharge

Bulk tailings will be discharged from the embankments from a single point or through a series of spigot offtakes.

Single point discharge may be employed in freezing conditions or during periods of construction when cyclones are not in use. When operating the discharge point should be inspected daily to assess beach development, check for signs of erosion, and to ensure that the end of the pipe is not submerged. Tailings flow location will be controlled by fully opening or closing valves at the upper or lower dump valve.

Tailings discharge through spigots can be controlled by adjusting the number and location of open offtakes on each discharge section. Any offtakes that are not used must be located at the front end of the discharge section to avoid sanding in the pipeline. The optimum number of offtakes will be determined based on performance of the system, but deposition will utilize up to six offtakes. The optimal configuration will be determined during operations.

Discharge from each spigot should be carried down the upstream face of the embankment through a section of material handling hose and into a sacrificial HDPE pipe to avoid erosion of embankment fill. Tailings will flow through the end of the pipe until it is submerged by the accreting tailings surface. Tailings will then exit from the pipe through a series of slots in the pipe crown. These slots also allow air entry into the pipeline, thereby mitigating surge and vacuum conditions that might otherwise develop.

Air may enter or leave the system during pipeline filling and draining through vent holes in the pipeline at the M1 dump valves, through open offtakes or through the vent at the T2 Dropbox.

6.2.3.4 Tailings Discharge with Cyclones

Tailings will be discharged through cyclones to the greatest extent possible. Cyclone underflow may be placed directly as embankment fill or stockpiled

DRAFT

for future placement by mechanical methods. Operating procedures will be developed by the Tailings Co-ordinator, and will depend on the type of system, and the number and location of the cyclones. Basic operating procedures for a generalized system are described below.

Tailings flow will be directed to the cyclones by closing the upper or lower dump valve. The bulk tailings stream will flow through a 24 inch pipe with a series of offtakes, each leading to a cyclone. Redundancy will be built into the system to allow the entire system and each individual cyclone to be bypassed. A 60 psi rupture disc provides an emergency outlet in the event of excessive line pressure.

Cyclone underflow will be placed directly into embankment fill or a stockpile, and overflow and bypass flows will be directed into the tailings impoundment.

The minimum monitoring requirements during cyclone operations are described in Table 1.2.

Cyclones may require high line pressures (approximately 30 psi) to operate efficiently. Tailings must be backed up to the T2 Dropbox in order to generate this pressure, and this condition leads to the accumulation of sand in the pipeline over time. The resulting reduction in flow capacity can lead to overflow at the T2 Dropbox or the pressure relief pipe. The cyclones must be shut down and the tailings line flushed if this occurs. Spilled tailings will be contained in the pipeline ditch and T2 Dropbox overflow pond.

6.2.3.5 General Rules

A key to the satisfactory operation of the Tailings Storage Facility is an awareness of several operating rules:

- Never leave the tailings pipeline with all valves closed. Permanent blockage due to sanding may occur, with overflow at the T2 Dropbox. In addition, damage may occur to pipework components due to the

DRAFT

excessively high pressures that can develop. There must be an open pathway for tailings to exit before the tailings system is filled or spigots are relocated.

- Inspect the tailings pipeline system on a daily basis. Repairs or adjustments must be made as soon as possible to prevent future problems and to minimize the potential for concentrator shutdown.

- Sequence tailings discharge when spigotting by moving downstream. Generally, tailings discharge should be moved to offtakes in the downstream direction. This enhances draining and is particularly important under freezing conditions. The pipeline must be fully flushed prior to relocating the discharge upstream.

  All offtakes downstream of the knife gate valve below the section in operation should remain open to allow the unused section of the pipeline to drain. When a new section is put into operation, the offtake valves in the new section must first be opened and flow established prior to shutting off the offtakes in the section previously operating.

- Maintain non-erosive laminar flow over the tailings beaches. Turbulent, highly erosive flow results in poor solid/liquid separation of the tailings. Spigots causing problems should be closed or throttled. Additional spigots should be opened or installed as required.

- Flush the pipeline prior to shutdown or relocation. The pipeline should be fully flushed by discharging water through it and allowing it to drain. No operator intervention is required during shutdown.

- Reduce the number of discharge points in use during prolonged cold spells. More concentrated discharge may be required if freezing problems are encountered due to reduced flow in sections of the pipeline or if access becomes difficult.

DRAFT

- Control the discharge of cyclone underflow when placing directly as embankment fill. This will prevent erosion of existing fill and reduce segregation of underflow sand.

- Keep the Seepage Collection Ponds at the minimum operating level during cycloning operations.

6.2.3.6 Emergency Procedures

Regular inspection of the pipeline with occasional disassembly for inspection will ensure that most problems are identified before emergency situations develop. A rupture or leak may continue for many hours before it is observed and local erosion of the pipe containment channel or embankment fill may occur. There are two possible emergency situations associated with the tailings pipework system:

Rupture of the tailings system.

The most likely locations for rupture are at or close to valves, joints or fittings within the pipeline, or at connections to structures. If a rupture occurs, it may be possible to by-pass it with a temporary pipe, or to continue operations by allowing controlled spillage while repairs are being made. Under some circumstances, a shutdown of the entire system may be required.

Blockage of the tailings system.

Blockage may result from a number of causes:

- Foreign material in the system.
- Failure to open enough valves to allow full flow.
- Local low flow velocities resulting in a sand build-up in the pipeline.
- Blockage of spigots due to insufficient number of discharge holes in the outlet pipe.

DRAFT

- Vacuum collapse of 6-inch (150 mm) spigot pipes.
- Failure of pipeline component (rubber gasket, sleeve, etc.).
- Freezing of the pipeline content.

A blockage in the tailings line might result in the flow of tailings from the T2 Dropbox to the overflow pond if tailings production in the concentrator is not stopped. The level sensors in the dropbox will warn the operators if the dropbox is going to spill. The overflow pond is sized to store the volume of tailings in the pipe between the concentrator and the dropbox. If this volume is surpassed, the tailings will flow out of the overflow pond into the pipe containment channel and will move further downstream.

Should blockage occur in the spigot pipework, flow will be taken up by other spigots that are open. The blocked spigot may become completely sanded in and it may be necessary to remove it from service for flushing or replacement.

If a blockage occurs, these procedures should be followed:

- If possible, commence discharge from another upstream location.
- Determine the cause of the blockage and take action to return the affected pipeline to service.
- Carry out all necessary repairs or remedial measures.
- Recommence normal operations.

A blockage may possibly be by-passed with a temporary pipe and operations continued while repairs are being made.

Under some circumstances, shutdown of the concentrator may be required.

6.2.4 Monitoring Requirements

A daily tailings operator record sheet should include the following information for the tailings system:

DRAFT

- Tonnes of tailings solids discharged to the Tailings Storage Facility.
- Average solids content (percent), or solids pulp density.
- Tailings discharge locations, by spigot or cyclone numbers, or by chainage.
- Samples of cyclone overflow and underflow collected for mass balance calculation and particle size analysis.
- Tailings line pressure at all pressure gauges.
- Duration of any shutdown.
- Elevation of the tailings supernatant pond at the reclaim barge.
- Extent of beach development, including location (by chainage) and width.

6.2.5 Inspection and Maintenance

During initial operations, careful inspection and observation of the pipework components is essential. Most inspection and maintenance activities are observational and the following minimum requirements are recommended:

Daily

- Inspect the Millsite Sump and Southeast Sediment Pond, record water levels and note which inlet pipes are in operation (see Section 6.6).
- Inspect the operation of the T2 Dropbox and the pressure relief pipeline and record any operating problems or discharge.
- Inspect the tailings and reclaim pipelines in the pipe containment channel.
- Record if the tailings discharge is through the dump valve(s), spigots, from the end of the pipeline, or from cyclones. Note and record which spigots are in operation at the Tailings Storage Facility.

DRAFT

- Record which cyclones are in operation, and make a visual assessment of underflow discharge. Note any evidence of inefficient operation, such as roping, and corrective actions taken.
- Inspect the spigots for blockage, rupture, vacuum collapse, leaks, excessive movement, pinching, etc. Record any obvious operating problems.
- Note where the system is snorting or whistling or where any flattening or kinking of the pipeline is observed.
- Note any areas of excessive erosion and relocate discharge as required. Select the best location for relocation by observing tailings beach and pond locations.
- Note the water clarity in the basin.
- Record the monitoring requirements (throughput, solids content etc.) as above.

Monthly

- For a short period, allow maximum discharge through the M1 dump valve(s) and the end of the pipeline. This will flush out any accumulated debris.
- Review beach development and implement modifications to the tailings discharge as required.
- Conduct surveys to determine the volume of cyclone underflow placed in stockpiles or in embankment fill.

Annually (or During Scheduled Concentrator Shutdown)

- Inspect pipework, bends and fittings for wear or abrasion. Replace as required.
- Remove any accumulated debris from valves, reducers and offtakes.
- Carry out maintenance as recommended by fitting and valve suppliers.
- Review beach development and implement modifications to the tailings discharge as required.

DRAFT

Sample record sheets and an annual inspection checklist are included in Appendix C. These sheets may be modified in conjunction with Mine personnel.

6.3 TAILINGS EMBANKMENTS

6.3.1 General Description

The Tailings Storage Facility has been designed with zoned earthfill embankments to an ultimate height of approx. 50 metres. The embankments include chimney drains and upstream toe drains to allow the controlled removal of process water from the tailings. The crest length at the final stage of development at El. 963 metres will be about 4,400 metres. The embankments are constructed using a combination of local borrow materials and cycloned sand tailings to maintain the minimum freeboard requirements above the rising tailings surface.

6.3.2 Previous Construction

Previous construction programs have included Stages 1a (El. 927m), 1b (El. 934m), 2A (El. 936m), 2B (El. 937m) and 2C (El. 941m) for the Main and Perimeter Embankments. The following embankment fill materials were used:

- The core (Zone S) and shell zones (Zone B) were constructed from locally borrowed glacial till. Four borrow areas have been utilized, two within the tailings basin (Original Borrow Area and Borrow Area 4) and two downstream of the Main Embankment left abutment (Borrow Areas 2 and 3).
- The chimney drain components were constructed using processed rock, crushed and screened at the Millsite and at the rock borrow area. The materials were hauled to the embankment for placement.

DRAFT

- Foundation drains were constructed using processed rock, crushed and screened at the Millsite and rock borrow area and trucked to the embankment.
- Vibrating wire piezometers are installed in the foundation soils, the embankment drains and fill zones and in the tailings to allow monitoring of pore water pressures.

The core zone (Zone S) is connected to a low permeability glacial till liner within the tailings basin. The glacial till liner exists naturally and was constructed in areas where the natural thickness is less than 2 metres. A foundation drain system was installed under the downstream zone (Zone B) of the Main Embankment. The foundation drains discharge into the Seepage Collection Pond, as discussed in Section 6.4.

The Stage 2C embankments will provide sufficient storage volume and suitable freeboard for tailings for approximately one year of production. There is also capacity to store the Year 2000 spring freshet, stormwater, make-up water from the Polley Lake pump station and additional surface runoff water from the Millsite Sump and Southeast Sediment Pond.

6.3.3 Embankment Drains

6.3.3.1 General Description

The embankments have drains that help to collect and convey water from the foundation soils and from the tailings mass to the seepage collection ponds. The embankment drains include a foundation drain system, a chimney drain system and upstream toe drains.

6.3.3.2 Foundation Drains

A system of five foundation drains (FD-1 to FD-5) has been installed at the Main Embankment. The foundation drains comprise 4-inch (100 mm) perforated CPT pipes set in coarse gravel that is surrounded by filter fabric.

DRAFT

The gravel was obtained by crushing and screening rock from the Millsite. The foundation drains are connected to the Drain Monitoring Sump with solid 6 inch (150 mm) HDPE pipes that enable monitoring of flows and water clarity for each drain.

Vertical pressure relief wells have been install at the main embankment and connect to FD-5. They consist of sand vertically injected to a depth that intercepts the more permeable glaciofluvial foundational sands found along the southwest abutments of the Main Embankment.

6.3.3.3 Chimney Drain System

A chimney drain system was installed in Zone B at the Main Embankment. The system comprises a vertical chimney drain with a longitudinal (collector) drain and three outlet (conveyance) drains. The chimney drain system for Stage 1a/1b extended from El. 915.7 metres to El. 929 metres. The chimney drain was constructed using filter sand obtained from crushing and screening rock at the Millsite and at the rock borrow area. The longitudinal and outlet drains include 6 inch (150 mm) perforated CPT pipes set in coarse gravel that is surrounded by filter fabric. The gravel and filter fabric are encapsulated by filter sand. The outlet drains currently daylight on the downstream face of the Stage 1a/1b Main Embankment. They will not be extended further because collected seepage will drain freely through the downstream rockfill zone. The vertical chimney drain, comprising filter sand and a rockfill transition zone, will be extended above elevation 929 m during Stage 3 construction.

A Perimeter Embankment chimney drain system has not been completed. The downstream cycloned sand zone incorporated into the Stage 3 Perimeter Embankment will allow seepage water to drain.

The South Embankment chimney drain system will be installed during Stage 4 construction.

DRAFT

6.3.3.4 Upstream Toe Drain

An upstream toe drain was installed in the Main Embankment during Stage 2C construction. The drain consists of 200 mm perforated CPT pipe, encapsulated in filter sand. Drain flows discharge through outlets installed in foundation materials at the abutments, and are conveyed through solid CPT pipe to the Seepage Collection Pond.

6.3.4 On-going Construction

6.3.4.1 Stage 3 and On-going Stages

The Stage 3 Main Embankment comprises a downstream raise. The downstream fill will consist of locally quarried rockfill.

The Stage 3 Perimeter Embankment comprises a modified centreline raise with hydraulically and mechanically placed cyclone sand incorporated into the downstream fill.

The Stage 3 South Embankment consists of a homogeneous glacial till berm with a maximum height of approximately 2 m.

Stage 3 Design Drawings are presented in Appendix A.

The performance of the Main, Perimeter and South Embankments will be monitored and reviewed continually as part of the observational design approach. The configuration of future expansions will be adjusted as needed to meet freeboard and performance requirements.

6.3.4.2 Fill Materials

On-going construction of the embankments will be carried out as a part of mine development. The embankments are zoned and include the following materials:

DRAFT

- glacial till for the core zone (Zone S),
- shot rock for the downstream zone of the Main Embankment (Zone C),
- cycloned sand for the downstream zone of the Perimeter Embankment (Zone CS),
- processed filter sand (Zone F) in drainage and filter zones,
- select shot rock (Zone T) for transition zones, confining berms and upstream fill,
- waste rock or sandy gravel for the coarse bearing layer, which is placed directly on the tailings beach, and
- earthfill (Zone B) for upstream fill.

Cycloned sand may be placed directly (hydraulically) or hauled from stockpiles and placed by conventional mechanical methods. It may be incorporated into future stages of the Main Embankment. This will require the construction of transition zones to provide the required filter relationship with rockfill placed during Stage 3 construction.

The South Embankment will be zoned and incorporate the following materials.

- Glacial till for the core zone (Zone S), Zone S, which is the core zone.
- Random fill which can consist of a glacial till or rockfill for the downstream zone. A transition zone may be required to achieve a filter relationship with the Zone S material if rockfill is used to construct the downstream fill.
- Waste rock or sandy gravel for the coarse bearing layer, on which the first upstream raise will be placed.
- Earthfill (Zone B) or select rockfill (Zone T) will be used to construct the upstream fill.

Glacial till will be obtained from local borrow areas. Preference is to be given to suitable areas within the basin in order to minimize haul distances and to

DRAFT

increase the storage capacity of the facility. Rockfill materials may be obtained from the Rock Borrow Area or from Mine waste dumps. Filter sand will be processed at the Mill.

6.3.5 Instrumentation and Monitoring

6.3.5.1 General Description

Vibrating wire piezometers, survey monuments, drain monitoring sumps and groundwater monitoring wells have been provided for monitoring the facility.

Piezometers - Vibrating wire piezometers have been installed on four instrumentation planes (A, B, C and E) at the Main Embankment in the following materials:

- Foundation soils,
- Foundation drains,
- Chimney drain,
- Glacial till fill,
- Rockfill (Zone T haul road)

Piezometers have also been installed in the fill and foundation of the Perimeter Embankment on Plane D.

The piezometers are vibrating-wire type with 50 psi or 100 psi maximum reading capability. The piezometers and readout equipment were supplied by SINCO and RST. Additional piezometers will be installed in the embankment fill materials and drain zones during future construction programs.

Some piezometer leads have been hard wired into SINCO terminal panels. The remaining leads will be connected to the terminal when they can be permanently buried in embankment fill. The piezometers are monitored using a portable readout box, SINCO Model No. 52611900.

DRAFT

Piezometer readings are recorded manually and pore pressures are calculated using spreadsheets set up by Knight Piésold. The spreadsheets are updated on site and weekly summaries are sent by fax for review by Knight Piésold.

Drain Monitoring Sumps - The foundation drains were installed with separate solid HDPE conveyance pipes that enable the monitoring of flow rates in the Drain Monitoring Sumps. Water clarity can also be observed and samples can be collected for water quality.

Survey Monuments - Survey monuments are to be installed at each instrumentation plane for each future embankment raise.

Monitoring Wells - Monitoring wells have been installed around the perimeter of the Tailings Storage Facility, as shown on Figure 6.3. Three additional monitoring wells will be installed along the South Embankment in the Stage 3 construction. The monitoring requirements for these wells are described in the Knight Piésold document "Manual on Sampling and Handling Guidelines for Determination of Groundwater Quality" (Knight Piésold Ref. No. 1625/5).

Details of the instrument locations and installations up to Stage 2C are shown on Drawing Nos. 11162-10-150 through 11162-10-154. Additional instrumentation planes may be added as the embankments are extended.

6.3.5.2 Monitoring Requirements

Vibrating Wire Piezometers

A summary of the existing vibrating wire piezometers is presented on Table 6.1 with trigger levels, which if exceeded, will require investigation and possible contingency or remedial actions.

The piezometer specifications and details, including the calculations used to determine the pore pressures, are available at the Mine. A sample piezometer monitoring sheet is included in Appendix C.

DRAFT

Survey Monuments and Control Points

A sample survey monument monitoring sheet is included in Appendix C. The procedure for calculating embankment movement is also shown on this sheet. Trigger levels and the required appropriate actions are summarized on Table 6.2.

Survey control points established for Stage 1a/1b construction act as survey control for all features at the Tailings Storage Facility, including staff gauges for monitoring the pond level and the survey monuments on the embankment. New survey control points will be established as required.

Drain Flows

A sample drain flow monitoring sheet is included in Appendix C. This sheet has a column for each of the five Main Embankment foundation drains. Total flows are taken as the sum of the five drains.

The above listed tables and sheets will be reviewed and updated as part of the ongoing design for each embankment raise.

Construction Monitoring

Construction monitoring will be carried out by, or under the supervision of a qualified engineer. The requirements for construction monitoring will be defined in detail for each stage but will generally include the following:

- inspection of prepared foundations and fill surfaces,
- inspection of borrow materials,
- collection of control and record samples for laboratory testing and interpretation of the results,
- performance and interpretation of field density and moisture tests, and
- review and interpretation of monitoring data.

DRAFT

Construction monitoring requirements during direct hydraulic placement of cyclone underflow as embankment fill may include:

- visual assessment of cyclone operation,
- collection of overflow and underflow samples for mass balance calculation and particle size analysis, and interpretation of the results, and
- visual assessment of drainage water collection ditches and ponds, and measurement of drain flows.

Construction monitoring is typically carried out on a daily basis throughout the construction program, but requirements may be adjusted as conditions dictate.

6.3.5.3 Monitoring Schedule

The following schedule for monitoring of the tailings embankments is a minimum requirement (included on Table 1.2):

Weekly

- Read piezometers and record data. Include barometric pressure. Piezometers in the cycloned sand drainage zones may be monitored daily during hydraulic placement in embankment fill.
- Monitor flow rates from conveyance pipes in Drain Monitoring Sump and comment on water clarity while monitoring drain flow rates.
- Monitor flow rates in drainage collection system during cycloning operations. Monitoring frequency may be increase to daily.
- Record flow rates from the Chimney Drain outlet drains at the Main Embankment, if possible.
- Record water levels in monitoring wells.

DRAFT

Monthly

- Compile all piezometer data, develop graphical plots and have a qualified Engineer review all data. Forward a brief report to the Design Engineer, including the data and plots.
- Compile the Foundation Drain flow rate data from the conveyance pipes in the Drain Monitoring Sump. Also, comment on water clarity. Forward a brief report to the Design Engineer.
- Compile the flow rate data from the Chimney Drain outlets. Also, comment on water clarity. Forward a brief report to the Design Engineer.

Quarterly

- Complete a survey of all movement monuments and calculate displacements (if any). Compile the survey data and forward a copy to the Design Engineer. Also, check the established survey control points and add new control points, as required.
- Record water levels in all monitoring wells. Compile the data, develop graphical plots and have a qualified Engineer review all data. Forward a brief report to the Design Engineer, including the data and plots.
- Determine the extent of the tailings beach development and forward a brief report to the Design Engineer.

Annually

- Review the performance of all piezometers and arrange to replace any essential units that have failed.

6.3.6 Inspection and Maintenance

The following schedule for inspection and maintenance of the tailings embankments is a minimum requirement:

DRAFT

Daily

- Inspect the upstream face of the embankment for excessive erosion caused by tailings discharge or by the discharge of water pumped back from the Seepage Collection Ponds.
- During the winter season, relocate the tailings discharge points, or place additional protective riprap as necessary.
- During summer construction season, monitor cyclone performances.
- Inspect the outlets from the chimney drain, if possible. Note any flows.

Weekly or Following a Major Storm

- Inspect the entire embankment along both crests and along the downstream toe for any signs of erosion or damage.

Annually

- Annual inspection of the embankment and review of the instrumentation monitoring by a Professional Engineer familiar with the design and operating criteria for the facility and the on-going embankment construction requirements.
- Annual inspection should be included in a general inspection of the Tailings Storage Facility to assess overall performance.

After a Significant Earthquake

- Follow the contingency procedures of Section 6.8.
- Arrange for an inspection of the facility by a Registered Professional Engineer familiar with the project.

6.4 SEEPAGE COLLECTION PONDS

6.4.1 General Description

Seepage collection ponds are located beyond the final downstream toe of the Main and Perimeter Embankments. Foundation and Chimney Drain flows are collected, along with local runoff and runoff diverted from disturbed areas

DRAFT

downstream of the embankments. Flows are conveyed from the drain monitoring sumps through an 8 inch (200 mm) solid HDPE pipe into the seepage collection ponds. The water is pumped over the embankments, back into the Tailings Storage Facility.

6.4.2 System Requirements

The Seepage Collection Pond storage capacities are summarized below.

The Main Embankment Seepage Collection Pond has a storage capacity of 36,000 cubic metres (to the invert of the 450 mm overflow culverts). It has a dead storage of 10,500 cubic metres below the invert of the seepage recycle sump inlet pipe and a maximum operating storage volume of 25,500 cubic metres. The depth/capacity curve is shown on Drawing No. 1625.214.

The Perimeter Embankment seepage collection pond has a maximum storage capacity of 5,000 cubic metres below the maximum operating level of El. 928 metres. The dead storage is 1,000 cubic metres and the maximum operating storage volume is 4,000 cubic metres. An overflow culvert has been installed. The depth/capacity curve is shown on Drawing No. 1625.214.

Recycle pumps inside the sumps control the water level in the seepage collection ponds. Level sensors control the pumping frequency. Normally, only one pump will be operating. The pump systems were designed by Others. Appropriate Specifications, Operating Manuals, etc. are available at the Mine.

The pumps discharge into 6 inch (150 mm) HDPE pipes which are extended over the embankments. The pressure ratings for the HDPE pipes are DR17 at the Main Embankment and DR 26 at the Perimeter Embankment. The discharge pipes will need to be moved for each future embankment raise.

Provision is made in the seepage recycle sumps for surge flow and for pipeline drainage. Pipeline drainage will normally only be required during freezing conditions.

DRAFT

6.4.3 Operating Procedures

The Mine has established the operating procedures for the seepage recycle sumps. Minimal supervision is required to operate the seepage collection ponds and recycle sumps.

6.4.4 Monitoring Requirements

The following are minimum requirements for the Seepage Collection Ponds:

- The pond levels must be recorded on a regular basis to ensure that the levels are low and there is no risk of discharge through the overflow culverts. Also, the level must be kept low so that the drain flows can be monitored. Daily monitoring of the pond levels is recommended during the spring freshet and high rainfall storm events.
- Record the average recycle sump pumpback flow rates on a weekly basis. Compile the pumpback data from the recycle sumps and forward a brief report to the Design Engineer on an annual basis.
- Confirm daily that the power supply for the pumps is in working condition. If the power supply is interrupted, the operators must monitor the pond levels more closely to ensure that process water is not released through the overflow culverts. Portable pumps must be used to recycle the process water as required.

6.4.5 Inspection and Maintenance

Routine inspection and maintenance of the recycle pumps should be as per the manufacturers' recommendations. Water levels and pump settings are to conform to all manufacturers' recommendations, including pump cycle frequency.

The discharge pipelines should be inspected on a monthly basis to ensure that the system drains when the pumps are stopped. All valves should be checked

DRAFT

and confirmation made that they are in working order, especially during freezing periods.

6.5 RECLAIM SYSTEM

6.5.1 General Description

Water accumulates in the Tailings Storage Facility as the tailings settle and consolidate. Additional input includes runoff from within the tailings catchment area and runoff diverted to the facility. Most of the process water for the mill is provided by recycling this water from a floating barge pump station located in an excavated channel in the Tailings Storage Facility. A booster pump station is located approximately at the midpoint on the hydraulic profile of the pipeline. The pump systems for the reclaim barge and booster pump stations were designed by Others.

The reclaim system has been designed for a flow of 8,000 US gpm. Reclaim water will be pumped from the barge to the mill in a 24 inch (610 mm) pipeline in two steps, as follows:

- From the barge to the booster pump station - The 24 inch reclaim pipeline has various sections of 24 inch HDPE up to the booster pump station. The DR (dimensional ratio) of the HDPE pipe increases uphill as the pressure head reduces.

- From the booster pump station to the mill - The 24 inch pipeline is comprised of various sections of 24 inch HDPE from the booster pump station to the mill. As for the lower section, the DR (dimensional ratio) of the HDPE pipe increases uphill as the pressure head reduces.

The barge is located in a channel excavated adjacent to the access road. The pump on the barge is connected to a ball joint on the access road via a 40 foot long 24 inch steel pipeline. The ball joint has a maximum operating range of 15 degrees.

DRAFT

As the water level in the Tailings Storage Facility rises (and with it the barge), the pitch of the 40 foot steel pipe will flatten as it approaches the level of the ball joint. Before the ball joint is inundated, the barge, ball joint and the 40 foot steel pipe will need to be relocated to a new ramp at a higher elevation. The 40 foot steel pipe will then be reconnected to the on-shore HDPE 24 inch pipeline.

The ball joint and ramp configuration will require relocation at three metre elevation increments. Additional access ramps will be constructed as required. The reclaim pipeline is shown on Drawing Nos. 1625.218, 219 and 223. These drawings may not reflect the current configuration, as the Mine may modify parts of the system as the need arises

The barge (by Others) will be provided with an access walkway, a heated enclosure, flow meter(s), pressure sensors, de-icing piping and visual alarms. A drain valve on the barge will allow the entire reclaim pipeline to be drained if required for maintenance, for barge relocation, or during a prolonged shutdown under extreme cold conditions. Drainage will be directed to the pond or through the de-icing pipework.

Details of the reclaim barge design and pump control system are included elsewhere in a manual provided by the barge manufacturer. Control and monitoring of the barge operation will be carried out from the mill control room, although local control will be available at the reclaim barge and booster pump stations.

6.5.2 Monitoring Requirements

Daily record sheets for the operation of the barge and booster pump stations should include the following:

- Instantaneous flow rates.
- Total volumes pumped.
- Line pressure in pump at the discharge manifolds.

DRAFT

Additional monitoring requirements may be set out in an Operating Manual provided by the barge and pump manufacturer (such as identification of running units, running time for individual pump motors, current drawn by pump motors and pump/motor bearing temperatures).

6.5.3 Inspection and Maintenance

The reclaim barge and pipework will be included in the overall planned maintenance program for the mine. Procedures listed below will supplement this program.

Daily

- Inspection of the pipeline for leaks or excessive movement, especially at fixed connections (the on-shore ball joint and the booster pump station).
- Onboard inspection of the barge as set out in the reclaim Barge Operating Manual. Checks of the pumps, de-icing equipment, mooring, lighting, flexible ball joint and walkway.
- Excessive snow must be removed. Adjustments to the mooring are to be made as required.
- Inspection of the booster pump station, including checks of the pump, de-icing requirements, etc.

Weekly

- Assess the need for barge relocation and ensure that any required excavation is complete and that pipes, mooring lines, anchors, winches, etc. are in place and readily available.
- Inspect the reclaim barge access road for stability and erosion, especially on the side where the pipeline is located.

DRAFT

Annually

- An annual structural inspection of the barge should be carried out to assess and repair any damage resulting from corrosion, grounding and general wear and tear.
- Winterizing the barge and booster pump station prior to the end of summer should be carried out in accordance with Section 6.8.5.

Major Storm Event

- Major storm events (wind, rain, snow) and significant runoff require that more frequent inspections are conducted. Mooring lines may require adjustment, snow or ice may need to be removed, or a temporary relocation of the barge may be required.

6.6 MAKE-UP WATER SUPPLY

6.6.1 General Description

In addition to the reclaim water obtained from tailings consolidation and local runoff, additional process water for the mill will be provided by a make-up water supply system which has three sources, as follows:

- Fresh water from Polley Lake. The Mine is permitted to annually extract up to one million cubic meters of water from Polley Lake during the spring freshet period (typically April/May). The Polley Lake pumping system provides this make-up water. The system includes a submerged intake connected to an on-shore diesel pump. Water will be pumped to the Tailings Storage Facility in an HDPE pipeline, which has varying pressure (DR) ratings. The maximum pumping capacity of the system is approximately 5,500 US gpm. The pipeline is laid on grade on the access road. Water exits the pipeline through an open end discharge onto natural ground in the Tailings Storage Facility. Riprap will be installed as necessary to dissipate the energy of the discharge water stream and to reduce erosion within the tailings basin.

DRAFT

Details of the pump are included in a manual provided by the manufacturer. Control and monitoring of the pump will be carried out at the pump.

- Runoff from the Millsite. The Millsite area is graded so that all runoff is directed to the Millsite Sump. In the future, water will be collected in a manhole. The normal operating level is the invert of the bottom inlet at the manhole (El. 1102.7 metres). The water level should be kept at this low level so that storage capacity for the design storm event is available in the sump. Discharge from the manhole will be conveyed to the tailings line in an 8 inch (200 mm) HDPE pipeline. The pipeline is buried through the Millsite area and runs in the pipe containment channel, where it is connected to the 22 inch DR17 HDPE tailings line via a prefabricated Tee in a section of the pipeline that flows by gravity (non-pressurized flow). Currently, water is pumped into the 30 inch tailings line immediately adjacent to the Millsite Sump. The water level must be maintained at the bottom inlet on the manhole at all times.

- Runoff from Southeast Waste Dump. Runoff is collected in a ditch that flows to the Southeast Sediment Pond. Water is decanted through a manhole which has four valved inlet pipes which can be used to control the water level in the sediment pond. The normal operating level is the invert of the second inlet at the manhole (El. 1054.5 metres). The water shall not be permitted to rise above this so that storage capacity for the design storm event is available in the pond. A 10 inch (250 mm) DR21 HDPE discharge pipeline runs from the manhole to the reclaim booster sump. By using manually operated valves at the sump, the water can be directed to the sump, if sufficiently clear, or into the T2 Dropbox.

6.6.2 Monitoring Requirements

Daily record sheets for the operation of the make-up water system components should include the following:

DRAFT

Polley Lake Pump Station

1. Flows in Hazeltine Creek.
2. Polley Lake water level.
3. Instantaneous flow rates.
4. Total volume pumped.
5. Location, flow rate and water quality of any seeps.

Additional requirements may be set out in an Operating Manual provided by the pump manufacturer (such as running time for pump, pump/motor bearing temperatures).

Millsite Sump

1. Flows being pumped or exiting the decant.
2. Water Level.
3. Identification of which inlets are open and which inlets are actively discharging water.
4. Comments on water clarity.
5. Location, flow rate and water quality of any seeps.

Southeast Sediment Pond

1. Flows exiting the decant.
2. Water Level.
3. Identification of which inlets are open and which inlets are actively discharging water.
4. Comments on water clarity.
5. Identification of whether water is being discharged into the reclaim booster station sump or the T2 dropbox.

6.6.3 Inspection and Maintenance

The components of the make-up water system and associated pipework will be included in the overall planned maintenance program for the mine. Procedures listed below will supplement this program.

Daily (While Operating)

DRAFT

Polley Lake Pump Station

- Inspection of the pipeline for leaks or excessive movement.
- Inspection of the pump as set out in the appropriate Operating Manual.
- Inspection of pipeline outlet channel for possible erosion.

Millsite Sump

- Inspection of manhole and inlet pipework (or pump).
- Inspection of 8 inch (200 mm) pipeline and connection to tailings line.

Southeast Sediment Pond

- Inspection of manhole and inlet pipework.
- Inspection of 10 (250 mm) inch pipeline, the connection at the reclaim sump and the valves.

Weekly

- Assess the total volume of water pumped from Polley Lake and confirm whether more pumping is allowed or required.
- Assess the Polley Lake pumping system intake for clogging, siltation, etc.
- Inspect the embankment sections of the Millsite Sump and Southeast Sediment Pond, including the embankment crest, fill slopes and toes for signs of instability and evidence of seepage.
- Inspect the collection ditch at the base of the Southeast Sediment Pond.

Annually

- An annual inspection of the Polley Lake pumping system intake, the pump and the pipeline should be conducted. A report should be prepared, including all pumping data.
- The Polley Lake pump should be winterized or removed when pumping is finished.

DRAFT

- A report on the status of the Millsite Sump should be prepared, including all measured water levels and seepage locations.
- A report on the status of the Southeast Sediment Pond should be prepared, including all measured water levels, seepage locations and the status of the runoff collection ditch.

Major Storm Event

- Major storm events (wind, rain, snow) and significant runoff require that more frequent inspections be conducted. The Polley Lake intake, pump, access road and pipeline should be inspected for possible damage and power interruption.
- Additional inlets may need to be opened at the Millsite Sump (or pumping capacity) and Southeast Sediment Pond manholes. Observations should be made at the T2 Dropbox to ensure that the tailings pipeline capacity is not being exceeded due to high inflows from the make-up water supply ponds. It may be necessary to redirect the discharge from one or both of the ponds through the overflow culverts.
- The embankment sections of the Millsite Sump and Southeast Sediment Pond should be inspected if the water level rises above normal operating levels. Inspection should include the inside slopes after the water level drops.
- Snow or ice may need to be removed from all of the locations discussed above.

Additional inspection and maintenance requirements may be developed during operations.

DRAFT

6.7 CLOSURE AND RECLAMATION

6.7.1 General

The Tailings Storage Facility and associated structures will be reclaimed as part of on-going mine operations and finally at closure of the mine. The primary objective for reclamation will be to return the Tailings Storage Facility to an equivalent pre-mining use and capability. The following objectives are implicit in achieving this goal:

- Long-term preservation of water quality within and downstream of the decommissioned operations.
- Long-term stability of the tailings impoundment.
- Grading and reclamation of all access roads, ponds, ditches and borrow areas that are not required beyond mine closure.
- Removal and proper disposal of all pipelines, structures and equipment not required beyond mine closure.
- Long-term stabilization of all exposed erodable materials.
- After mining ceases, natural integration of disturbed lands into the surrounding landscape and to the greatest extent practicable, restoration of the area's natural appearance.
- Establishment of a self-sustaining vegetative cover consistent with existing forestry, grazing and wildlife needs

Based on these objectives and on ongoing operational and reclamation experience a detailed Closure and Reclamation Plan will be developed.

6.7.2 On-going Reclamation

As part of the on-going reclamation program, additional topsoil from annual construction activities may be salvaged and stockpiled at the Tailings Storage Facility or at the Mine. Soil surveys and volumes will be updated to ensure that

DRAFT

at mine closure a topsoil stockpile of sufficient capacity is available for the anticipated reclamation needs.

An on-going reclamation program may include final reclamation of all excavated surfaces and fill slopes as they are completed, including the Millsite Sump and Southeast Sediment Pond.

6.7.3 Final Tailings Deposition

During operations, tailings will be deposited from the crest of the Perimeter and Main Embankments. This will result in the development of a tailings beach which slopes to the west abutment of the South Embankment. The current concept is that tailings deposition during the final phase of operations will continue to be managed in such a way as to produce a final tailings beach consistent with post-closure surface drainage requirements and the location of a spillway channel at the west abutment of the South Embankment.

6.7.4 Closure and Surface Reclamation

At closure of the Tailings Storage Facility, it is currently envisaged that the tailings surface will be decommissioned so as to develop a mixed forested/ wetlands complex with a gradual transition towards a ponded area at the final spillway. This would require covering of the tailings embankments and the upland portions of the exposed tailings beach with a layer of soil stockpiled during operations. The topsoil would be revegetated with indigenous species of conifer and deciduous trees, willow and marsh land grasses. Ultimately, all water would be routed over the tailings surface, through the wetlands and the final spillway.

Pipework for the tailings and reclaim systems will systematically be removed once all water quality and pit flooding requirements have been met. Similarly, the seepage collection ponds and recycle pumps would be retained until monitoring results indicate that drainage flows and seepage from the tailings area are of suitable quality for direct release to the environment. At that time, the seepage collection ponds could be decommissioned and the pumps be

DRAFT

removed. The groundwater monitoring wells and piezometers in the tailings embankment would be retained for use as long term monitoring devices.

6.7.5 Final Spillway

The final spillway would be constructed in competent ground at the west abutment of the South Embankment and discharge to the Edney Creek North tributary drainage. The elevation of this spillway and outflow channel would be designed to establish a set water elevation for the wetlands on the tailings surface. The final spillway will be designed later on in the mine life, when the final configuration of the Tailings Storage Facility is known and a Detailed Closure and Reclamation Plan has been approved.

6.7.6 Long-term Monitoring Requirements

On-going monitoring of all reclamation measures will be carried out post closure, to confirm that the reclamation objectives are being achieved and sustained.

6.8 CONTINGENCY PLAN

6.8.1 Scope of Contingency Plan

The potential consequences of emergency situations and plausible natural disasters are reviewed in this section. Contingency procedures to mitigate the effects of possible loss of tailings material or process water from the containment facilities are described.

The following events or situations are considered:

- Earthquake
- Extreme rainfall or snowmelt runoff
- Power failure
- Extreme low temperature
- Extreme snowfall

DRAFT

- Leakage and component failure
- Pipeline Blockage
- Avalanche or debris slide
- Fire

6.8.2 Earthquake

6.8.2.1 General

The Mount Polley site is located within the Northern B.C. source zone (NBC), close to the boundary with the Southeastern B.C. source zone (SBC). Two earthquake events were considered in the design:

- The Operational Basis Earthquake (OBE) used for operations is the 1 in 475 year return period event. This is appropriate for significant hazard risk structures for which some damage may occur but complete failure is not expected.
- The Maximum Design Earthquake (MDE) for closure of the tailings facility has been taken as 50% of the Maximum Credible Earthquake, which is the largest predicted event.

The peak ground motions for each event are summarized as follows:

	Design Basis Earthquake (OBE)	Maximum Design Earthquake (MDE)
Earthquake magnitude, Ms	6.5	6.5
Peak horizontal acceleration (g)	0.037	0.065

6.8.2.2 Potential Impacts and Mitigating Design Features

The occurrence of a significant earthquake could result in damage to, or failure of earthworks or pipelines, loss of electric power or triggering of avalanches or debris slides. The consequences of such occurrences are discussed below.

DRAFT

Design of the tailings area embankments included an assessment of their stability and potential displacement resulting from earthquake loadings, with the facilities considered to be significant hazard structures. The design ensures that the embankment would continue to function as designed, following a Operational Basis Earthquake.

6.8.2.3 Contingency Procedures

Major Earthquake Event (Modified Mercalli Intensity VI or greater)

Recognition:

Magnitude 7.5 or greater (characterized by difficulty standing; hanging objects quiver, masonry cracks; waves on ponds; some minor injuries)

Action:

- Immediately stop tailings discharge and the pumping of reclaim water and of all process solutions.
- Immediate inspection of the tailings embankments, seepage collection pond embankments and Millsite Sump and Southeast Sediment Pond for obvious deformation, movement or seepage.
- Immediate inspection of all pipelines, manhole sumps, spillways, ditches and pump stations for cracking, rupture, leakage or other obvious damage.
- Initiate continuous monitoring of tailings embankment piezometers. Use data loggers as required, until steady state pore water pressures are re-established.
- Check monitoring wells for changes in groundwater levels.
- Arrange for an immediate inspection by a suitably qualified Engineer familiar with the design of the facility.

DRAFT

- Operations can commence following written approval by the Engineer and the completion of all necessary repairs.

Minor Earthquake Event (Modified Mercalli Intensity V or less)

Recognition:

Felt outdoors as well as indoors (characterized by liquid disturbed; small objects displaced; doors swing open or close; pictures move).

Action:

- Inspect all pipelines, manhole sumps, spillways, ditches and pump stations for cracking, rupture, leakage or other obvious damage.
- Inspect tailings embankments, seepage collection pond embankments and Millsite Sump and Southeast Sediment Pond for obvious deformation, movement or seepage.
- Initiate monitoring of tailings embankment piezometers. Use data loggers as required, until steady state pore-water pressures are re-established.
- Check monitoring wells for changes in groundwater levels.
- If any sign of damage or leakage is observed arrange for an inspection by a suitably qualified Engineer familiar with the design of the facility.

Operations may recommence following all necessary repairs.

6.8.3 Extreme Runoff

6.8.3.1 General

During normal operations, sufficient storage capacity will be maintained within the Tailings Storage Facility at all times to fully contain the 24 hour Probable Maximum Precipitation (PMP) runoff of 679,000 cubic metres. The facility

DRAFT

was also designed to store up to 2,500,000 cubic metres of make-up water. This additional storage capacity may be available to supplement any flood runoff requirements.

The Millsite Sump and Southeast Sediment Pond have sufficient storage capacity to contain the 1 in 10 year 24 hour storm event, provided that the pond levels are kept at the minimum level at all times. In the event that water is in the ponds prior to an extreme event, the storage capacities can be increased by selectively routing flows to the tailings pipeline.

A system of inspections will be carried out to mitigate any potential adverse consequences of extreme runoff, including the following:

6.8.3.2 Inspection Prior to the End of Summer

Roadways, culverts and ditches:

- Clean-out and regrade as necessary.
- Maintain safety berms.
- Maintain equipment marker posts.
- Maintain snow fences.
- Repair riprap.

Tailings Discharge System

- Check all valves, connections and anchor points.
- Maintain marker posts.
- Ensure pipeline is restrained against thermal contraction.
- Ensure sufficient room exists for prolonged discharge through a full diameter dump valve into the Tailings Storage Facility from the closest point to the mill.

Piezometers and standpipes

- Read all water levels and pressure sensors.

DRAFT

- Install marker posts.

Seepage Collection Ponds

- Clean out and re-grade as necessary.
- Repair riprap.

Seepage Recycle Sumps

- Winterize pumps in accordance with manufacturer's recommendations.
- Change pump operating sequence and water level probe settings for winter operation, if required.

Reclaim Barge Pump Station

- Winterize in accordance with manufacturer's recommendations and appropriate Operating Manual.
- Check and if necessary activate de-icing system.
- Change pump operating sequence and water level probe settings for winter operation, if required.
- Complete sufficient excavation of barge channel for next 6 months of operations.
- Relocate barge if warranted to minimize moves during winter.

Booster Sump Pump Station

- Winterize in accordance with manufacturer's recommendations and appropriate Operating Manual.
- Change pump operating sequence and water level probe settings for winter operation, if required.

Millsite Sump

- Clean out and re-grade as necessary.
- Inspect manhole and pipework.
- Repair riprap.

DRAFT

Southeast Sediment Pond and Ditch

- Clean out and re-grade as necessary.
- Inspect manhole and pipework.
- Repair riprap.

6.8.3.3 Inspection Immediately Prior to Heavy Rainfall

On announcement of a heavy rain warning the following procedures will be adopted:

- Inspect all facilities, remove debris and repair as necessary.
- Draw down ponds to the maximum practicable extent.
- Monitor rise in water levels during the event.
- Maintain facilities as necessary during event.
- Ensure that recycle pumps are operating continuously.
- If necessary, close inlets or valves on manhole sumps that are about to be fully submerged.

In the event that the seepage collection pond levels reach the overflow culverts, advise the regulatory authorities, take water samples prior to and during the discharge, all in accordance with permitting requirements.

6.8.3.4 Inspection and Remedial Work after Major Storm Events

After any major storm event, a thorough inspection of all ditches, culverts, ponds, spillways, channels and other water control facilities will be carried out as outlined above. Necessary repairs will be carried out as soon as reasonably possible to reduce the chance of aggravating any existing deficiencies during subsequent storm events.

Excess water stored on the tailings surface may be drawn down as required by water requirements in the mill.

DRAFT

6.8.4 Power Failure

6.8.4.1 General

For the duration of a total power outage all electrical systems except for those connected to standby generators will cease operation. A power failure would have only a minor impact on the Tailings Storage Facility and its associated works as described below.

6.8.4.2 Systems Affected and Mitigating Measures

Systems within the scope of this manual that would be affected by a loss of power to pumps include:

- Tailings discharge pumps, pipeline and cyclones
- Reclaim barge and associated pumps
- Reclaim booster sump and associated pumps
- Seepage collection pond pumps
- Groundwater recovery well pumps (if required)

Lighting, instrumentation, heating and flow monitoring functions would also be affected.

Tailings Discharge

A stoppage in the discharge of tailings to the Tailings Storage Facility will have no adverse impact. The cyclones should be shut down and dump valves opened to allow the tailings pipeline to drain as fully as possible into the facility by gravity. No further action is required. In the event that surplus clean water is available in the mill, the pipeline should be flushed by gravity. To ensure complete drainage of the pipeline, especially under freezing conditions, operators should open all valves in the pipeline before leaving the pipeline in the desired start-up condition, with one or several valves open for discharge.

DRAFT

Reclaim Barge

Power failure will result in loss of the ability to reclaim water to the mill. This will be of little concern, as a total power failure will also shut down the mill. Additional consequences will be the loss of water flows for de-icing the barge periphery and failure of barge heating and lighting. Under normal shutdown conditions the discharge line from the barge to the booster sump will remain full. During a prolonged power failure under freezing conditions, this pipeline will need to be drained to avoid freezing. Valves at the barge allow the pipe to be drained directly to the surface pond or back through the de-icing pipework. Drainage should begin through the de-icing pipework at or before the time a visible skin of ice has formed around the barge and with sufficient flow to keep the ice clear. Drainage is unnecessary during non-freezing conditions.

If power shutdown is further prolonged under severe freezing conditions, consideration should be given to providing local water circulation using a diesel operated pump, or the minimizing of ice growth around the barge by use of insulating panels laid on the water surface.

Reclaim Booster Pump Station

As described above, a power failure will result in loss of the ability to reclaim water to the mill head tank for process use. This will be of little concern as a total power failure will also shut down the mill. Additional consequences will be the failure of the reclaim sump heating and lighting. Under normal shutdown conditions the discharge line from the booster sump to the mill would remain full. In the event of a prolonged power failure during freezing conditions, this pipeline would need to be drained to avoid freezing. Once the sump is filled to capacity, excess water will overflow into the T2 Dropbox, along with gravity drainage from the Southeast Sediment Pond. From the dropbox, the water will enter the tailings pipeline and will flow to the Tailings Storage Facility. In the event that emptying of the sump is required, portable pumps will be required. Drainage is not necessary during non-freezing conditions.

DRAFT

Seepage Collection Pond Pumps

Loss of power to the pumps will result in a rise in water level if significant inflows are occurring. The pond will normally be operated with a maximum possible freeboard. The release of any water would commence once the overflow culvert invert levels were reached. Water quality monitoring would need to be conducted in accordance with permit requirements.

Should the release of such water be prohibited, temporary pumps must be provided to return excess water to the facility, over the embankment crest.

Under normal operations (and in the event of a power failure) pump control valves will allow the pipelines to drain back to the seepage collection ponds. If a prolonged (greater than one hour) power outage occurs during cold conditions, the pipeline should be checked to ensure that it has drained fully.

Groundwater Recovery Wells

If groundwater recovery well pumps have been installed, loss of power may result in temporary groundwater movement past these wells.

6.8.5 Low Temperature

Prolonged periods of sub-zero temperatures can effect the operation of the Tailings Storage Facility in a number of ways:

- Ice build-up in pipelines resulting in partial or complete blockage.
- Ice build-up restricting or diverting inflows to pipes, culverts and conduits.
- Thermal contraction of pipe work laid on the ground.
- Malfunction of valves and flow meters.

Design features included to mitigate the effects of low temperatures include the following:

DRAFT

- Burial of pipelines wherever practical.
- Free draining pipelines with drain valves at any low spots.
- Anchorage of HDPE pipelines laid on grade.
- Thermal tracing of critical valves and pipelines.
- Automatic draining of selected pumped pipelines.
- Provision for discharge of tailings into the facility from the full diameter dump valve located at the point closest to the mill.
- Provision for shut off of discharge to pipelines with small inflows and significant potential for freezing.

Operating features that will further mitigate effects of low temperatures include:

- Modification of pumping rates to ensure continuous flows sufficient to avoid freezing.
- Batch discharge of high flows followed by pipeline drainage where continuous low flows might be prone to freezing.

6.8.6 Pipeline Leakage or Rupture

Several pipelines flow between the Millsite and Tailings Storage Facility, around the Tailings Storage Facility, or are entirely located within the facility itself, including:

- Tailings discharge pipeline (Millsite to T2 Dropbox).
- Tailings discharge pipeline (T2 Dropbox to tailings).
- Millsite Sump discharge pipeline.
- Southeast Sediment Pond discharge pipeline.
- Seepage recycle pipelines (seepage collection ponds to tailings).
- Polley Lake make-up water (Polley Lake pump intake to tailings).

DRAFT

Pipeline leakage gives rise to two concerns:

- The possibility of erosive damage to earthworks, or to pipeworks.
- The possibility of escape of process liquids to surface or groundwater.

Failure of the tailings pipeline, reclaim water pipeline, seepage recycle pipelines or the Polley Lake pipeline would occur in catchments outside of the tailings storage facility, including the Polley Lake, Bootjack Lake and Edney Creek catchments. Failures would be easily repaired.

Routine daily and weekly pipeline inspections and early repair of visible leaks or investigation of seeps or wet spots in the area of buried pipelines will minimize the possibility of uncontrolled spillage from pipelines.

Both the tailings and reclaim pipelines can be continuously monitored for any sudden changes in pressure or flow. Such a change could occur in the event of a pipeline rupture or blockage condition.

6.8.7 Pipeline Blockage

Pipeline blockage may result from one of a number of factors:

- Debris intrusion into a pipeline.
- Solids build-up including ice formation.
- Pipeline collapse or component failure.
- Unexpected valve closure.
- Blockage of inlet.
- Faulty operating practise.
- Thermal movement resulting in pinching of pipeline.
- Crushing of the pipeline by a vehicle.

Design features employed to minimize the potential for blockage include.

DRAFT

- Provision of isolating valves, couplings and access points into pipelines at critical areas to allow inspection and clearing.
- Provision for complete draining of pipelines when not in use.
- Separation of pipeline from vehicular traffic.
- Control room monitoring and alarms based on flows and pressures.

In addition, operation inspection and maintenance procedures outlined in other sections of this manual have been designed to minimize the potential for blockage of pipelines.

6.8.8 Avalanche and Debris Slide

The project area is in relatively gentle topography that is not prone to avalanches or debris slides. Therefore, the storage capacity of the tailings basin is not likely to be affected by such events. However, the tailings and reclaim pipe containment channel and the Southeast Sediment Pond runoff collection ditch could become filled with debris and overtop. Any portion of the canals that are damaged or blocked by avalanche debris would be repaired with on-site equipment.

If necessary, areas of possible impact will be barricaded off and signs posted to prevent the entry of vehicular traffic and to warn of the possible occurrence of avalanches.

6.8.9 Fire

Fire would have no significant impact on the continuing operation of the tailings facility. Damage to mill facilities would likely result in tailings discharge being halted together with pumping of reclaim from the barge. In the event of damage to seepage recycle pumps, temporary installations may be required to recycle water over the embankment before discharge occurs over the spillway.

DRAFT

SECTION 7.0 - CERTIFICATION

This report was prepared and approved by the undersigned.

Prepared by: _____

Jeremy Kinch, E.I.T.
Staff Engineer

Approved by: _____

Ken Brouwer, P.Eng.
Principal

DRAFT

This report was prepared by Knight Piésold Ltd. for the account of Mount Polley Mining Corporation. The material in it reflects Knight Piésold's best judgement in light of the information available to it at the time of preparation. Any use which a third party makes of this report, or any reliance on or decisions to be made based on it, are the responsibility of such third parties. Knight Piésold Ltd. accepts no responsibility for damages, if any, suffered by any third party as a result of decisions made or actions based on this report. This numbered report is a controlled document. Any reproductions of this report are uncontrolled and may not be the most recent revision.

Knight Piésold CONSULTING

TABLE 1.1

MOUNT POLLEY MINING CORPORATION
MOUNT POLLEY MINE

UPDATED DESIGN BASIS AND OPERATING CRITERIA

M:\11162\13\Report\3\3-tbl1-1.doc June 9, 2000

ITEM	DESIGN CRITERIA
1.0 GENERAL DESIGN CRITERIA	
Scope	Generally applicable to all components and structures.
Regulations	MEM MELP (Water Management Branch)
Codes and Standards	NBC and related codes CAN/CSA HSRC (Health, Safety and Reclamation Code for Mines in B.C.) ASTM ACI ANSI
Design Life	14 Years
Operational Criteria: General	 NBC where relevant
Rainfall/Precipitation:	(Section 2.1 Ref. No. 1625/1) and (Ref. No. 1624/1)
Seismic:	
OBE (operations)	M = 6.5, A max. = 0.037 g, (Section 2.3 Ref. No. 1627/2)
MDE (closure)	M = 6.5, A max. = 0.065 g, (Section 2.3 Ref. No. 1627/2)
2.0 TAILINGS BASIN	
Site Selection	(Section 4.0 Ref. No. 1627/2), (Ref. No. 1625/1) and (Ref. No. 1621/1) • Capacity and filling characteristics. • Hydrology and downstream water usage. • Hydrogeology and groundwater regime. • Aesthetics and visual impact. • Foundation conditions. • Construction requirement. • Closure and reclamation requirements. • Capital and operating costs.
Geological and Geotechnical Conditions	(Section 5.0 Ref. No. 1627/2), (Ref. No. 1625/1) and (Ref. No. 1623/1).
Basin Liner	• Compacted glacial till with frost protection layer required in areas with <2 m in-situ glacial till. • Liner placed in 3 x 150 mm lifts. • Liner compacted to 95% Std. Proctor max. dry density (ASTM D698) at optimum moisture content minus 2% to plus 2%.
Embankment Foundation Drains	• Installed in Main Embankment Foundation. • Geotextile wrapped 1000 mm x 800 mm gravel/drain with 100 mm perforated CPT drain pipe. • Drain conveyance pipes are solid HDPE. • Discharge to Main Embankment Seepage Collection Pond via Drain Monitoring Sump.
Stripping	• Required at areas directly affected by construction (embankments, basin liners, seepage collection ponds, reclaim barge channel, stockpiles, roads etc.). • Remove organic soil to topsoil stockpiles.

Revised 11-Aug-00

Revision A

Knight Piésold CONSULTING

TABLE 1.1

MOUNT POLLEY MINING CORPORATION
MOUNT POLLEY MINE

UPDATED DESIGN BASIS AND OPERATING CRITERIA

3.0 TAILINGS EMBANKMENT		
Function		• Storage of tailings and process water for design life. • Provide storage for 24 hour PMP storm. • Provision for routing PMF at closure.
Embankment Crest Width		8 m starter dam and 6 m final dam.
Embankment Height (Max):	Starter	15 m (Crest El. 927 m), Figure 2.2
	Final	50 m (Crest El. 962 m), Figure 2.2
Embankment Crest Length:	Starter	1000 m
	Final	4500 m
Main Embankment		• Use rockfill for downstream shell • Final downstream slope at 2H:1V Drg. 11162-13-215
Perimeter Embankment		• Use cycloned sand for downstream shell • Final downstream slope at 2.5H:1V Drg. 11162-12-125
South Embankment		• Use Zone S fill for initial Stage 3 construction • Stage 3 downstream slope at 2H:1V Drg. 11162-12-130
Cycloned Sand Angle of Repose		5.5H:1V for Krebs System (4H:1V assumed for Linatex System)
Design Tonnage		7,300,000 tpy (20,000) tpd , Figure 2.2
Solids Content of Tailings Stream		35% (before Millsite and waste dump runoff added to tailings stream)
Pulp Density of Cycloned Sand Underflow		75%, (Ref. No. 11162-11-1)
Average Cyclone Availability		75%
Cyclone Underflow/Overflow Split		35% / 65% (Ref. No. 11162-11-1)
In-Situ Dry Density of Cycloned Sand Underflow		1.65 t/m^3 (Ref. No. 11162-12-2)
Cycloned Sand Permeability		5-7 x 10^{-3} cm/s (Ref. No. 11162-12-2)
Freeboard:	Operations	24 hour PMP event (679,000 m^3) plus 1.0m wave runup on 2.5 million m^3 operational storage pond.
	Closure	Sufficient to provide routing of PMF plus wave run-up.
Storage Capacity		84.5 million tonnes.
Tailings Density:	Year 1	1.1 t/m^3
	Year 2	1.2 t/m^3
	Year 3-13	1.3 t/m^3
Tailings Specific Gravity		2.78
Borrow Material Properties		(Section 6.3.3 Ref. No. 1627/2), 1995 Site Investigation Report (Ref No 1623/1), and (Ref No 1625/1).
Construction Diversion		Not required.
Emergency Spillway Flows:	Operations	Not required.
	Closure	Design flow for routing PMF event.
Filling Rate		Refer to current filling schedule (previous examples include Figure 2.2 and 2.3, Ref. No. 11162/12-2, Figure 6.1 and 6.2 Ref. No. 1627/2).
Fill Material Properties		Drg. No. 11162-12-104, (Drg. No. 1625.212 Ref. No. 1627/2)
Compaction Requirements		Drg. No. 11162-12-104, (Drg. No. 1625.211 Ref. No. 1627/2)

Knight Piésold CONSULTING

TABLE 1.1

MOUNT POLLEY MINING CORPORATION
MOUNT POLLEY MINE

UPDATED DESIGN BASIS AND OPERATING CRITERIA

Stability Analysis	Section 4.3, (Ref. No. 11162/12-2).
Seepage Analysis	Section 4.4, (Ref. No. 11162/12-2).
Sediment Control	Primary control from Main Embankment. Seepage Collection Ponds provide secondary sediment control.
Seepage Control	Seepage collection ponds and pumpback well systems.
Seismic Parameters	Section 2.3, Ref. No. 1627/2, and Ref. No. 1625/1.
Spillway Discharge Capacity	Not required during operations.
Settlement	Sections 6.6 and 6.7 Ref. No. 1627/2 and Ref. No. 1625/1.
Surface Erosion Protection	Revegetation with grasses on final embankment slope.
4.0 PIPEWORKS	
4.1 Tailings Delivery and Discharge Pipework	Section 8.0 Ref. No. 1627/2 and Ref. No. 1625/1.
Function	Transport tailings slurry and mill site and waste dump runoff to Tailings Storage Facility (TSF).
Tailings Pipeline	• Free draining, gravity flow pipeline. • Butt fusion welded HDPE with 30" DR15.5, 22" DR17 and 24" DR15.5.
Spigots	• Movable discharge section placed on tailings embankment crest. • Single point discharge when required.
Cyclones	• 6, 20 inch cyclones in operation • Future system to comprise 10, 18 inch Linatex Separators.
Flow Rate	• Design throughput 900 tonnes/hr dry solids. • Slurry solids content 35%. • Design flow 19.6 cfs (0.55 m^3/s). Increases to 23.8 cfs (0.67 m^3/s) at 30% solids content with addition of 4.2 cfs storm water runoff. • Waste dump and Millsite runoff will be added to tailings stream, increasing flow and decreasing solids content.
Spill Containment: - Mill site to Bootjack Creek - Bootjack Creek Crossing - Bootjack Creek to TSF	• Pipeline laid in pipe containment channel. There is an overflow pond for the T2 dropbox. • Pipeline sleeved in pipe containment channel. • Pipeline laid in pipe containment channel.
4.2 Reclaim Water System	
Function	Primary source of water for milling process. (Pump and Barge System Designed by Others.)
Reclaim Barge	• Prefabricated pump station on barge in excavated channel in TSF. • Local and remote control from Millsite.
Reclaim Pipeline	• 24" HDPE pipeline with varying pressure ratings along length.
Reclaim Booster Pump Station	• Prefabricated pump station located between TSF and Millsite. • Identical pumps, sensors and controls as reclaim barge for ease of maintenance.
Spill Containment	• See Item 4.1 above, all same for pipelines. • Booster pump station has closed sump.
4.3 Seepage Recycle System	
Function	Return seepage and foundation drain flows and cycloned sand drainage water to TSF.

Revised 11-Aug-00

Revision A

TABLE 1.1

MOUNT POLLEY MINING CORPORATION
MOUNT POLLEY MINE

UPDATED DESIGN BASIS AND OPERATING CRITERIA

Drain Monitoring Sumps	Flow quantity and water quality measurements on individual drains.
Seepage Collection Ponds	• Sized to hold 10 times max. weekly seepage flow quantity. • Excavated in low permeability natural soil liner, operated as groundwater sink. • Storm volumes are as reported in Ref No. 1627/2. • Pumps to be resized to handle an additional 16 l/s from cycloned sand drain water when required.
Seepage Recycle Pumps	• Set in vertical pump sumps. • Submersible pumps, system by Others. • Pumps discharge back to TSF via 150 mm HDPE pipes.
5.0 MAKE-UP WATER SUPPLY	
5.1 General	
Function	To direct runoff from the Millsite and Southeast Sediment pond to the TSF, providing additional water for recycle to the mill. Also, to implement the Polley Lake Pump Station when and as required to meet the project Water Management Plan objectives.
5.2 Millsite Sump	
Catchment Area	Approx. 20 ha direct catchment, plus pit dewatering.
Design Storm	1.5 x 1 in 10 yr. 24 hour event runoff (6,000 m^3)
Sump Cross-Section	3:1 inside slope, 2:1 outside slope, 4m crest width.
Normal Operating Level	1102.7 m
Maximum Operating Level	1106.2 m
Flow Control Structures	See Drg. No. 1625.232, Ref. No. 1627/2 for layout details.
Discharge Pipe	300 mm HDPE DR 21 to plant or tailings line.
Flow Monitoring	None.
5.3 Southeast Sediment Pond	
Catchment Area	Approx. 150 ha direct catchment.
Design Storm	1 in 10 yr. 24 hour event runoff (25,000 m^3)
Sump Cross-Section	3:1 inside slope, 2:1 outside slope, 4m crest width.
Normal Operating Level	1054.5 m
Maximum Operating Level	1057.4 m
Flow Control Structures	See Drg. No. 1625.232, Ref. No. 1627/2 for layout details.
Discharge Pipe	250mm HDPE DR 21 to Reclaim sump or T2 dropbox
Flow Monitoring	None.
5.4 Polley Lake Pump Station	Described in Ref. No. 1628/5
Max. Volume to be extracted	1,000,000 m^3 annually
Period for water extraction	Freshet
Max. Intake Velocity	0.11 m/s
Intake Screen Opening	0.1 inch (No. 8 Mesh wire cloth)
Spill Containment at Pump	Collection into a Holding Basin
Discharge Pipe	22 ½ inch ID, 350 ft of 19 ½ inch ID and 5200 ft of 17 ½ inch ID pipe.
Max. Flow	5,500 US GPM
Flow Monitoring	Flows in Hazeltine Creek, water level on Polley Lake, pumping hours times measured flow rate.
Security and Access	Signs for buried or submerged components, buoys attached to intake in Polley Lake.

TABLE 1.1

MOUNT POLLEY MINING CORPORATION
MOUNT POLLEY MINE

UPDATED DESIGN BASIS AND OPERATING CRITERIA

Discharge Pipe	22 ½ inch ID, 350 ft of 19 ½ inch ID and 5200 ft of 17 ½ inch ID pipe.
Max. Flow	5,500 US GPM
Flow Monitoring	Flows in Hazeltine Creek, water level on Polley Lake, pumping hours times measured flow rate.
Security and Access	Signs for buried or submerged components, buoys attached to intake in Polley Lake.
6.0 INSTRUMENTATION AND MONITORING	
6.1 General	
Function	To quantify environmental conditions and performance characteristics of the TSF to ensure compliance with design objectives.
6.2 Geotechnical Instrumentation and Monitoring	
Piezometers	• Measure pore pressures in drains, foundations, fill materials and tailings. • Vibrating wire piezometers. • Installed by qualified technical personnel. • Four instrumentation planes for Main Embankment and one for Perimeter Embankment and South Embankment.
Survey Monuments	• Deformation and settlement monitoring of embankments.
6.3 Flow Monitoring	• To provide data for on-going water balance calculations. • Drain flows regularly monitored. • Reclaim and seepage pump systems flow meters. • Tailings output monitored at millsite. • Streamflow monitoring.
6.4 Water Quality Monitoring	• To ensure environmental compliance. • Water quality samples taken at regular intervals from sediment ponds, drains (at drain monitor sump), groundwater monitoring wells, seepage ponds and tailings pond. • Upstream and downstream samples for impact analysis.
6.5 Hydrometeorology	• Operator weather station for input to water balance calculations. • Precipitation (rain and snow). • Evaporation. • Air quality monitoring (dust, etc.).
6.6 Operational Monitoring	• Quantify operation of tailings storage facility. • Rate of tailings accumulation in terms of mass and volume. • Tailings characteristics and water recovery. • Supernatant pond (depth, area and volume).
7.0 CLOSURE REQUIREMENTS	
7.1 General	Return impoundment to equivalent pre-mining use and productivity by establishing a wetland area adjacent to a final spillway and re-vegetating remainder of tailings surface with indigenous species of trees, shrubs and grasses adjacent to embankment grading to aquatic species along and adjacent to final pond. Establish vegetation on embankment slopes.

Knight Piésold CONSULTING

TABLE 1.1

MOUNT POLLEY MINING CORPORATION
MOUNT POLLEY MINE

UPDATED DESIGN BASIS AND OPERATING CRITERIA

7.2 Spillway	Two stage spillway with lower channel outlet designed to pass 1 in 200 yr. 24 hour flood event and upper wider outlet section designed to pass Probable Maximum Flood without overtopping embankments.

Notes:

1. The closure plan will remain flexible during operations to allow for future changes in the mine plan and to incorporate information from on-going reclamation programs.

Knight Piésold CONSULTING

TABLE 1.2

MOUNT POLLEY MINING CORPORATION
MOUNT POLLEY PROJECT
TAILINGS STORAGE FACILITY

SUMMARY OF MONITORING REQUIREMENTS

M:\11162\13\Report\3\[3-tbl1-2.xls]Table 1.2 09-06-00 9:13

COMPONENT	MONITORING RECOMMENDED	FREQUENCY
Tailings Basin	Elevation of Supernatant Pond	Daily [1]
	Volume of Supernatant Pond	Semi-annually
Tailings Deposition	Tailings discharged to facility (tonnes)	Daily [1]
	Solids Content or Pulp Density	Daily [1]
	Discharge Locations	Daily [1]
	Cyclone Operating Time	Daily [1],[4]
	Line Pressure	Daily [1],[4]
	Overflow and Underflow Density	Daily [1],[4]
	Shutdown times and durations	Daily [1]
	Tailings Beach Development	Quarterly
Tailings Embankments	Piezometers (vibrating wire)	Weekly
	Foundation Drain Flows	Weekly
	Outlet Drain Flows	Weekly
	Monitoring Well Levels (GW96-9, MP89-234)	Weekly
	All Monitoring Well Levels	Quarterly
	Survey Monuments and Control Points	Quarterly
Seepage Collection Ponds	Power supply check	Daily [1]
(Main and Perimeter	Pond Levels	As required [2]
Embankments)	Pumpback Flows	Weekly
Reclaim System	Instantaneous Flow Rate	Daily [1]
	Volume Pumped	Daily [1]
	Line pressure at pump manifold	Daily [1]
Make-up Water Supply		
Polley Lake Pumping System	Flows in Hazeltine Creek	Daily [1],[4]
	Polley Lake Water Level	Daily [1],[4]
	Instaneous Flow Rate	Daily [1],[4]
	Volume Pumped	Daily [1],[4]
Millsite Sump	Flows exiting the decant	Daily [1]
	Water level in sump	Daily [1]
	Identification of operating inlets	Daily [1]
	Comments on water clarity	Daily [1]
	Inspection for seepage.	Weekly
Southeast Sediment Pond	Flows exiting the decant	Daily [1]
	Water level in pond	Daily [1]
	Identification of operating inlets	Daily [1]
	Comments on water clarity	Daily [1]
	Identification of where water directed to	Daily [1]
	Inspection for seepage.	Weekly

Notes : [1] Items should be recorded daily on Tailings Operator Record Sheet.
[2] As required to ensure that there is no discharge through overflow culverts.
[3] Reporting requirements are provided in the text.
[4] Only required while operating.

TABLE 2.1

MOUNT POLLEY MINING CORPORATION
MOUNT POLLEY PROJECT
TAILINGS STORAGE FACILITY

RESERVOIR OPERATING CRITERIA

1. Reservoir Levels for Stage 3 Embankment (El. 944 m) :

- Maximum flood level El. 943.0 m
- Normal Maximum operating level El. 942.6 m
- Minimum water level (at reclaim barge) N/A

The 24 hour PMP event can be stored within the facility. There is no requirement to pass any water from a storm event. (See Figure 6.2 for filling schedule.)

These levels apply to the Stage 3 (El. 944 m) embankments only. The crest elevation must be increased so that the 24 hour PMP event can be stored at all times, with the provision for one metre of extra freeboard for wave run-up.

2. Flood Operation:

Adequate storage is provided to store runoff from the 24 hour PMP storm event. Storm events in excess of this can be contained by the extra one metre of freeboard provided for wave run-up or by extra freeboard provided as the embankment is raised.

TABLE 2.1 (CONT'D)

RESERVOIR OPERATING CRITERIA

During a flood event when the normal maximum operating level is exceeded the following shall be recorded every three (3) hours:

- precipitation
- reservoir level

If the reservoir levels exceed the maximum flood level (i.e. the storm exceeds the 24 hour PMP event), then the downstream area must be evacuated immediately and access restricted, as per the Emergency Preparedness Plan (EPP).

3. Reservoir Filling and Drawdown Rates:

There are no restrictions on the filling rate for the reservoir.

Drawdown is not anticipated. If required, the drawdown rate will be provided by a suitably qualified Professional Engineer.

4. Discharge Facilities and Release Rates:

There is no provision for discharge or release because adequate freeboard will be maintained at all times.

Detailed design basis and criteria are included on Table 1.1

Knight Piésold
CONSULTING

TABLE 3.1

MOUNT POLLEY MINING CORPORATION
MOUNT POLLEY PROJECT
TAILINGS STORAGE FACILITY

MAINTENANCE REQUIREMENTS

M:\11162\13\Report\3\[3-TBL3-1.XLS]Sheet1 08/11/2000 14:28

ITEM	FREQUENCY		
	As Required	Annual	5 Years
EARTHFILLS AND FOUNDATIONS (1)			
Piezometers	x		
Surface Movement Monuments	x		
Terminal Panel (for piezometers)		x	
Fill slopes	x		
PIPELINES			
Pipelines, Cyclones	x		
Tailings / Reclaim Pipe Containment Channel	x		
T2 Dropbox Overflow Pond	x		
DISCHARGE STRUCTURES			
Diversion Ditches	x		
Control Structures - manholes, etc.		x	
Outlet Structures - valves, flow meters		x	
AUXILIARY EQUIPMENT			
Seepage Collection Pump(s)		x	
Diesel powered portable pump used at Polley Intake Only		x	

Notes:
1. Includes fill slopes at Main Embankment plus Millsite Sump and Southeast Sediment Pond.

Knight Piésold CONSULTING

TABLE 4.1

MOUNT POLLEY MINING CORPORATION
MOUNT POLLEY PROJECT
TAILINGS STORAGE FACILITY

MINIMUM FREQUENCY OF INSPECTIONS AND TESTS

M:\11162\13\Report\3\[3-TBL4-1.XLS]Sheet1 09-06-00 9:35

ITEM	INSPECTION FREQUENCY	
	Weekly	Annually
1. INSPECTIONS:		
a. Routine	x	
b. Intermediate		
- earthfills	x	
- pipelines	x	
- civil		x
- mechanical equipment		x
- electrical equipment		x
2. TESTS:		
a. Portable Generators / Pumps		
- no load		x
- under full load		x
b. Valves / Flowmeters		x
3. EPP TESTS *:		
a. Communications Tests		x
b. Operational Tests		x

* EPP = Emergency Preparedness Plan

Knight Piésold
CONSULTING

TABLE 5.1

MOUNT POLLEY MINING CORPORATION
MOUNT POLLEY MINE
TAILINGS STORAGE FACILITY

EMERGENCY SITUATIONS AND RESPONSES

I. EMERGENCY SITUATIONS:

EMERGENCY	RESPONSE (SEE BELOW)
1. DAM BREACH Large and rapidly increasing uncontrolled release of water due to failure of the dam.	Steps 1 to 5 inclusive.
2. POTENTIAL DAM BREACH Any condition that could result in dam failure and uncontrolled release of water from the reservoir.	Steps 1 to 5 inclusive.
3. EARTHQUAKE An earthquake alert exists or if an earthquake is felt at the Mine Site.	The Dam Co-ordinator shall immediately direct a dam inspection and take the following action:
a. Severe Damage	Steps 3 to 5 inclusive.
b. Significant Damage	Steps 3 to 5 inclusive.
c. Minor Damage	File written report.
d. No Damage	File written report.

Revised: June 9, 2000
Revision A

TABLE 5.1 (CONT'D)

EMERGENCY SITUATIONS AND RESPONSES

4. FLOODS

- Slumping of dam slopes.	Steps 1 to 5 inclusive.
- Significant seepage or springs.	Steps 1 to 5 inclusive.

5. CRIMINAL ACTION

- Destruction or threat of Dam or associated structures.	The Dam Co-ordinator shall notify the R.C.M.P. and take action as required.

II. RESPONSE PROCEDURES:

Due to the remote location of the Tailings Storage Facility, the response procedures and all necessary remedial action shall be the entire responsibility of on-site personnel. The relevant Government Ministries and Officials shall be notified as soon as practically possible. The following is a preliminary listing of protocol to be followed in the event of an emergency, as detailed above:

STEP 1:

In the event of an emergency the Dam Co-ordinator shall be notified immediately by radio page or direct communication.

STEP 2:

The Dam Co-ordinator shall contact the following Supervisory Personnel:

Personnel:		Radio Call No.:
(a)	Dam Coordinator (Don Parsons or Eric Leneve)	170.430 or 170.790
(b)	Dam Operator (Tim Fisch)	170.430 or 170.790

TABLE 5.1 (CONT'D)

EMERGENCY SITUATIONS AND RESPONSES

(c) Technician (Greg Smith) 170.430 or 170.790

STEP 3:

The designated Supervisory Personnel above, or other, shall contact the relevant off-site personnel, including Government Ministry representatives and Regional Authorities (e.g. R.C.M.P.), as necessary.

STEP 4:

The Dam Co-ordinator or Dam Operator, under instruction from the Dam Co-ordinator, shall complete a brief status report describing the nature of the emergency and recommendations for immediate action. If the nature or severity of the emergency is uncertain, or if there are any uncertainties regarding the action to be taken, then the following person(s) who have expertise in earthfill dams, should be contacted for assistance:

(a)	Ken Brouwer, Knight Piesold Ltd.	Office Ph: 604 - 685 - 0543 Home Ph:
(b)	Bruce Brown, Knight Piesold Ltd.	Office Ph: 604 - 685 - 0543 Home Ph:
(c)	Jeremy Haile, Knight Piesold Ltd.	Office Ph: 604 - 685 - 0543 Home Ph:

STEP 5:

If the Dam Co-ordinator, or designated replacement, considers the emergency to be serious and urgent, then he will advise the following personnel on the status of the emergency and of the action to be taken:

TABLE 5.1 (CONT'D)

EMERGENCY SITUATIONS AND RESPONSES

(a)	Provincial Emergency Program	Ph: (800)663-3456
(b)	MELP, Water Management Branch, Dam Safety Officer	Ph: (250)387-3263
(c)	MEM, Geotechnical Branch	Ph: (250)952-0485
(d)	MEI, Mines Inspector	Ph: (250)565-4246
(e)	RCMP, Williams Lake, B.C.	Ph: (250)392-6211

III. POSSIBLE ACTION:

The necessary action to be taken in an emergency will depend on the type of emergency and may include, but not be limited to the following:

1. EVACUATION

Require immediate evacuation of areas downstream of the Tailings Storage Facility in the event of Dam Breach or full reservoir.

2. EQUIPMENT AND MATERIALS

Require the immediate mobilization of all necessary equipment from the Mine Site to repair any damage, repair dam slopes or slumping areas, etc.

3. RESERVOIR LOWERING

Require the immediate lowering of the reservoir by mobilizing and commissioning pump(s) as required. An emergency spillway may be permitted in natural ground on the left or right abutment. *In no case shall the reservoir be lowered by excavating through the earthfill.*

TABLE 5.1 (CONT'D)

EMERGENCY SITUATIONS AND RESPONSES

4. INSPECTION

Require a site inspection within 24 hours in the event of significant deterioration of embankment fill, or structures, etc. which may affect the integrity of the system.

Knight Piésold CONSULTING

TABLE 6.1

MOUNT POLLEY MINING CORPORATION
MOUNT POLLEY PROJECT
TAILINGS STORAGE FACILITY

SUMMARY OF VIBRATING WIRE PIEZOMETERS AND TRIGGER LEVELS

M:\11162\13\Report\3\[3-tbl1-2.xls]Table 6.1 9-Jun-100 11:17

Piezometer Identification Number	Serial Number	Tip El. (m)	Zone Monitored	Trigger Level		
				Frequency (Hz)	Pressure (m H2O)	Elevation (m)
A0-PE1-01	69689	938.5	Cycloned Tailings			
A0-PE2-01	43675	928.0	Tailings			
A0-PE2-02	43657	927.9	Tailings			
A1-PE1-01	64100	913.0	Foundation Drain	3000	2.0	915.0
A1-PE1-02	64098	912.1	Foundation Drain	3040	2.0	914.1
A1-PE1-03	64105	917.2	Chimney Drain	3015	2.0	919.2
A1-PE1-04	43649	936.3	Upstream Toe Drain			
A2-PE1-01	67191	913.3	Zone T Fill			
A2-PE1-02	69690	938.5	Glacial Till Fill			
A2-PE2-01	64104	903.7	Foundation, depth approx. 9.0 m	2875	15.0	918.7
A2-PE2-02	64103	909.8	Foundation, depth approx. 2.9 m	3000	8.9	918.7
A2-PE2-03	64101	919.4	Glacial Till Fill			
A2-PE2-04	64099	926.1	Fill (Stopped functioning)			
A2-PE2-05	64102	921.9	Glacial Till Fill			
A2-PE2-06	43650	898.9	Foundation, depth approx.	2810	20.5	919.4
A2-PE2-07	43654	902.8	Foundation, depth approx.	2840	16.6	919.4
A2-PE2-08	67195	907.6	Foundation, depth approx.	2995	11.8	919.4
B0-PE1-01	69692	939.1	Cycloned Tailings			
B0-PE2-01	43674	927.3	Tailings			
B0-PE2-02	43676	927.2	Tailings			
B1-PE1-01	64107	917.3	Foundation Drain	3090	2.0	919.3
B1-PE1-02	64106	916.0	Foundation Drain	3080	2.0	918.0
B1-PE1-03	64118	918.7	Chimney Drain	3115	2.0	920.7
B2-PE1-01	67194	916.3	Zone T (Stopped functioning)			
B2-PE1-02	69693	939.4	Glacial Till Fill			
B2-PE2-01	64110	902.0	Foundation, depth approx. 15.0 m	2840	21.0	923.0
B2-PE2-02	64116	909.5	Foundation, depth approx. 7.9 m	2865	13.9	923.4
B2-PE2-03	64109	921.0	Glacial Till Fill			
B2-PE2-04	64108	921.0	Glacial Till Fill			
B2-PE2-05	64113	921.7	Glacial Till Fill			
B2-PE2-06	43652	914.6	Foundation, depth approx. 2.3 m	2980	8.5	923.0
C0-PE1-01	69694	938.3	Cycloned Tailings			
C0-PE2-01	43673	927.8	Tailings (Stopped functioning)			
C0-PE2-02	43658	927.5	Tailings (Stopped functioning)			

Revised: June 9, 2000
Revision A

Knight Piésold
CONSULTING

TABLE 6.1

MOUNT POLLEY MINING CORPORATION
MOUNT POLLEY PROJECT
TAILINGS STORAGE FACILITY

SUMMARY OF VIBRATING WIRE PIEZOMETERS AND TRIGGER LEVELS

M:\11162\13\Report\3\[3-tbl1-2.xls]Table 6.1 9-Jun-100 11:17

Piezometer Identification Number	Serial Number	Tip El. (m)	Zone Monitored	Trigger Level		
				Frequency (Hz)	Pressure (m H2O)	Elevation (m)
C1-PE1-01	64111	914.7	Foundation Drain	3070	2.0	916.7
C1-PE1-02	64115	916.6	Chimney Drain	3070	2.0	918.6
C2-PE1-01	67196	915.0	Zone T (Stopped functioning)			
C2-PE1-02	69695	938.5	Glacial Till Fill			
C2-PE1-04	43653	914.3	Foundation Drain	2960	2.0	916.3
C2-PE2-01	64117	907.5	Foundation (Stopped functioning)	2860	14.2	921.7
C2-PE2-02	64119	910.5	Foundation, depth approx. 5.2 m	2955	11.2	921.7
C2-PE2-03	64112	921.0	Glacial Till Fill			
C2-PE2-05	64114	924.8	Glacial Till Fill			
C2-PE2-06	43647	906.6	Foundation, depth approx. 9.1 m	2940	15.4	922.0
C2-PE2-07	43655	912.3	Foundation, depth approx. 3.7 m	3000	9.7	922.0
C2-PE2-08	43656	914.0	Foundation, depth approx. 2.0 m	3000	8.0	922.0
D1-PE1-02	66520	928.8	Outlet Drain(Stopped functioning)			
D2-PE1-01	67193	930.4	Zone T (Stopped functioning)			
D2-PE2-01	64096	931.0	Glacial Till Fill			
D2-PE2-02	67192	927.3	Foundation (Stopped functioning)			
E2-PE2-01	43651	914.2	Foundation, depth approx. 4.6 m	2930	10.6	924.8
E2-PE2-02	43648	909.7	Foundation, depth approx. 9.1 m	2980	15.1	924.8

Notes:

1) Trigger level is the level at which the monitoring frequency must be increased (daily) and when contingency or remedial plans must be developed.
2) The trigger level for foundation piezometers is approx. 6.0 metres above ground and is based on the level where the factor of safety is approaching 1.1.
3) The trigger level for drain piezometers is approx. 2.0 metres of head.
4) Fill piezometers have no set trigger level, but must be closely monitored for pressure increases.

Revised: June 9, 2000
Revision A

Knight Piésold CONSULTING

TABLE 6.2

MOUNT POLLEY MINING CORPORATION
MOUNT POLLEY PROJECT
TAILINGS STORAGE FACILITY

TRIGGER LEVELS FOR SURVEY MONUMENTS

M:\11162\13\Report\3\[3-TBL3-1.XLS]Sheet1 08/11/2000 14:28

DISPLACEMENT TYPE	DESCRIPTION	LEVEL	MAGNITUDE OF DISPLACEMENT (m)	ACTION
Settlement	Loss of fill elevation associated with small displacements in upstream or downstream direction.	1	DEl = -0.01 to -0.02	Continue survey and inspections.
		2	DEl = -0.02 to -0.05	See Contingency 1.
		3	DEl > -0.05	Inspect embankment for cracking, sloughing or slumping, If observed, complete actions for Contingency 2. If not, notify Design Engineer, increase survey frequency to monthly and complete daily inspections.
Crest Movement	Displacement in the upstream or downstream directions, associated with minor changes in embankment crest elevation.	1	Dxy = ±0.03	Slight deformations in the downstream direction may occur during initial basin filling. Continue inspections and surveys.
		2	Dxy = ±0.05	See Contingency 1.
		3	Dxy > 0.05	Inspect embankment for cracking, sloughing or slumping, If observed, complete actions for Contingency 2. If not, notify Design Engineer increase survey frequency to monthly and complete daily inspections.

Contingency Actions	
1	Inspect the embankment crest and slopes for cracking, sloughing or slumping. If any of these are noted see Contingency 2. Otherwise continue with survey and inspection. Forward results to the Design Engineer immediately.
2	Cracks, sloughing or slumping found; determine size of affected area and photograph. Collect baseline measurements (e.g. length of crack, separation amount of movement, and rate of movement- if any). Closely inspect the embankment crest and slopes for other deformations, and the tailings beach for sinkholes or for unusual tailings or water movement or disturbance. Contact the Design Engineer with this information immediately. Inspect again, and determine if cracking or movement is continuing or accelerating. Arrange for additional survey monuments and increase frequency of inspection to twice daily. Survey daily until it is determined if displacements are continuing or accelerating. Arrange for an inspection by a suitably qualified Engineer.

XREF FILE : -

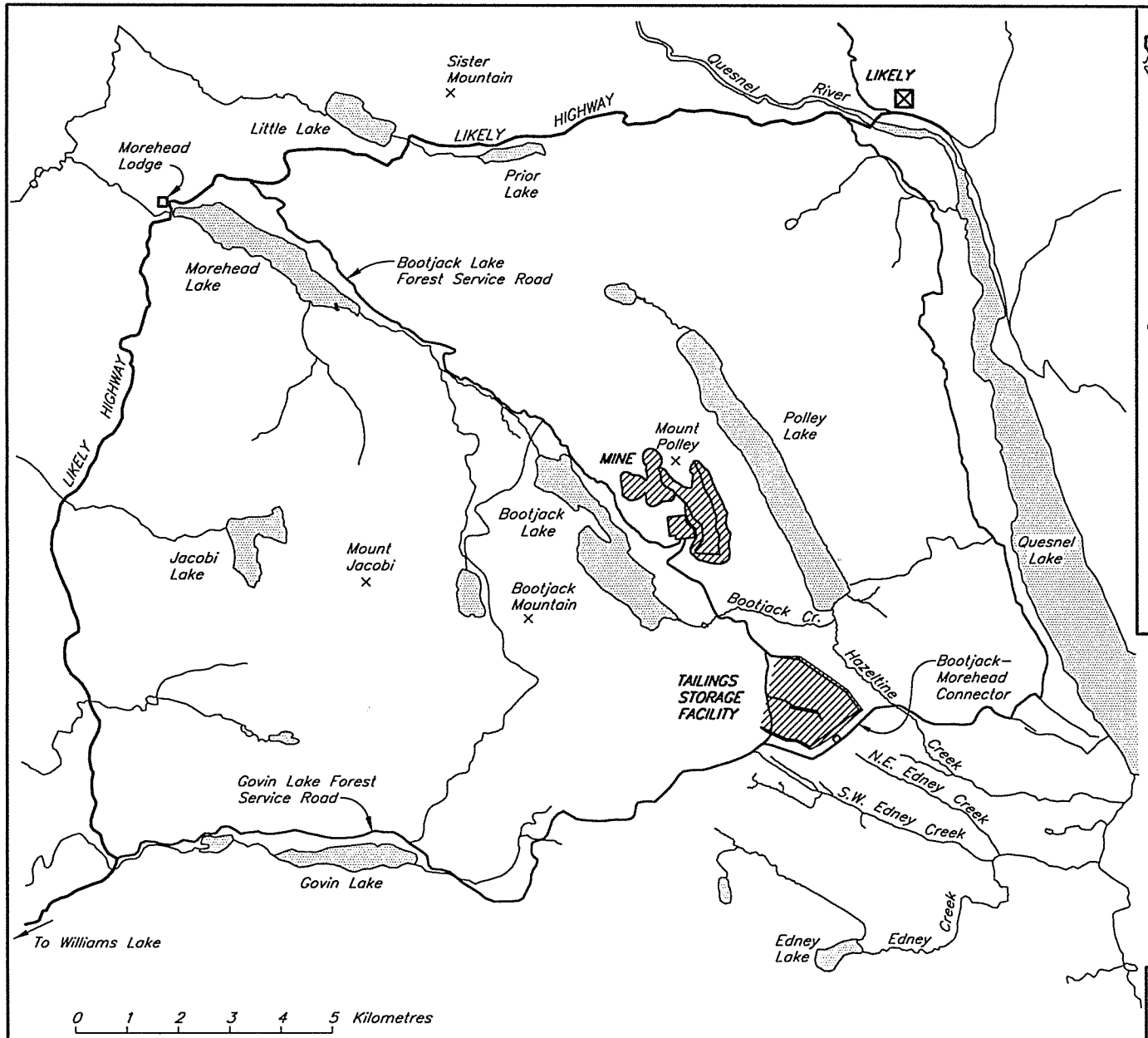

LOCATION MAP

KEY MAP

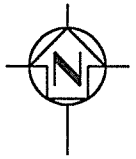

VANCOUVER B.C. CAD FILE: M:\1627\ACAD\Figs\A1 1=125000 Plot 1=1(PS) 07/06/00 tom

REV.	DATE	DESCRIPTION	DESIGNED	DRAWN	CHK'D	APP'D

REVISIONS

MOUNT POLLEY MINING CORPORATION

MOUNT POLLEY PROJECT

PROJECT LOCATION AND ACCESS PLAN

Knight Piésold CONSULTING

PROJECT NO.	REF. NO.	REV.
11162/10		

FIGURE 1.1

DAM CO-ORDINATOR

Mill Superintendant

DAM OPERATOR

Mill Shift Foreman

TECHNICIANS

(Maintenance Crews, etc.)

MOUNT POLLEY MINING CORPORATION

MOUNT POLLEY MINE

ORGANIZATIONAL FLOW CHART

Knight Piésold CONSULTING

PROJECT NO	REF. NO.	REV
11162/13	3	A

FIGURE 1.2

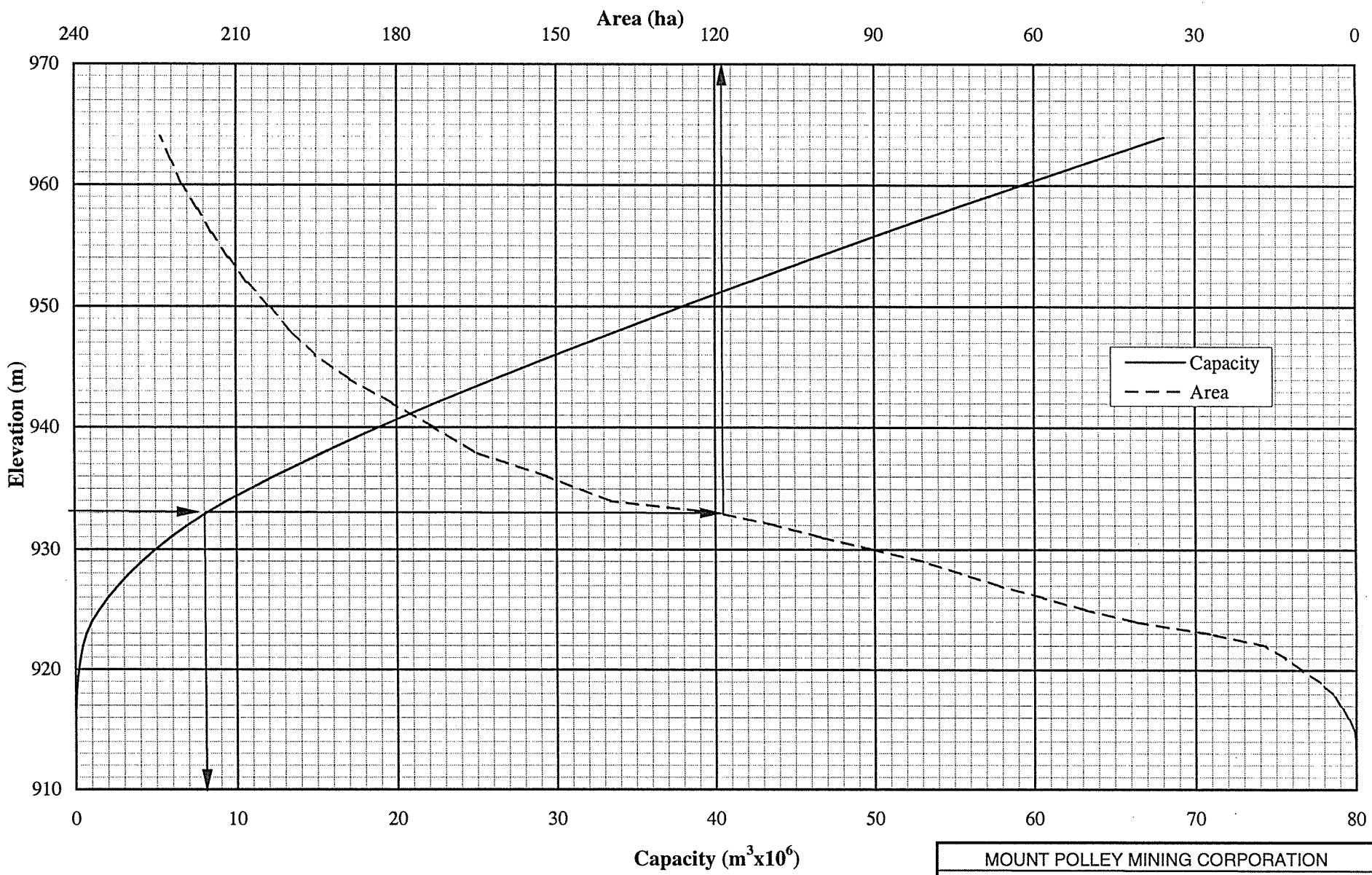

MOUNT POLLEY MINING CORPORATION

MOUNT POLLEY MINE

TAILINGS STORAGE FACILITY
DEPTH-AREA-CAPACITY CURVE

Knight Piésold CONSULTING

PROJECT NO.	REF.	REV
11162/13	3	A

FIGURE 6.1

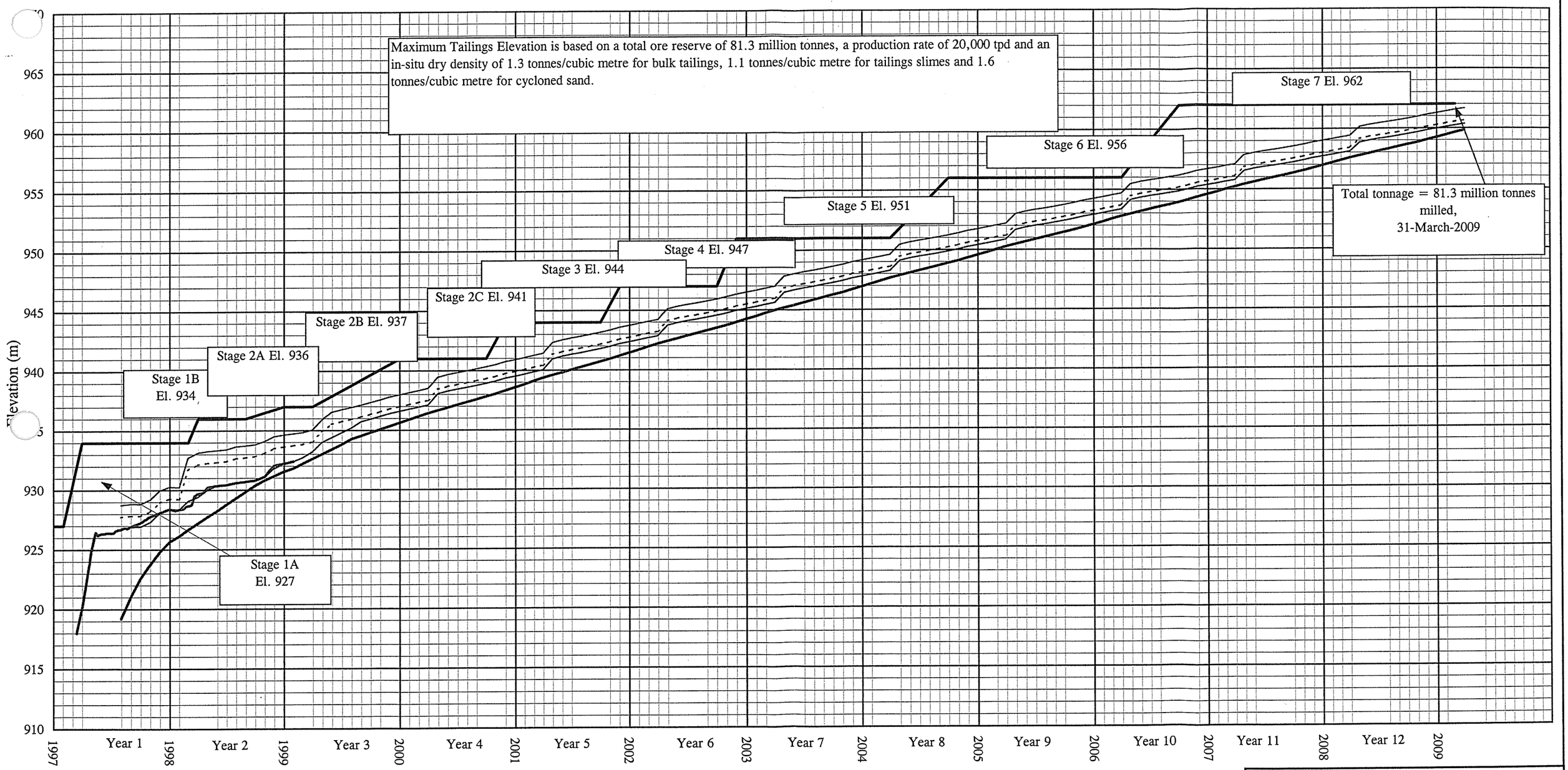

- Embankment Crest
- 1 m Freeboard
- 24 Hr. PMP (679,000m3)
- Reclaim Water
- Measured Pond El.
- Tailings Only

MOUNT POLLEY MINING CORPORATION

MOUNT POLLEY MINE

TAILINGS STORAGE FACILITY
FILLING SCHEDULE AND STAGE CONSTRUCTION
FOR CYCLONED SAND EMBANKMENT

Knight Piésold CONSULTING

PROJECT NO.	REF. NO.	REV
11162/13	3	A

FIGURE 6.2

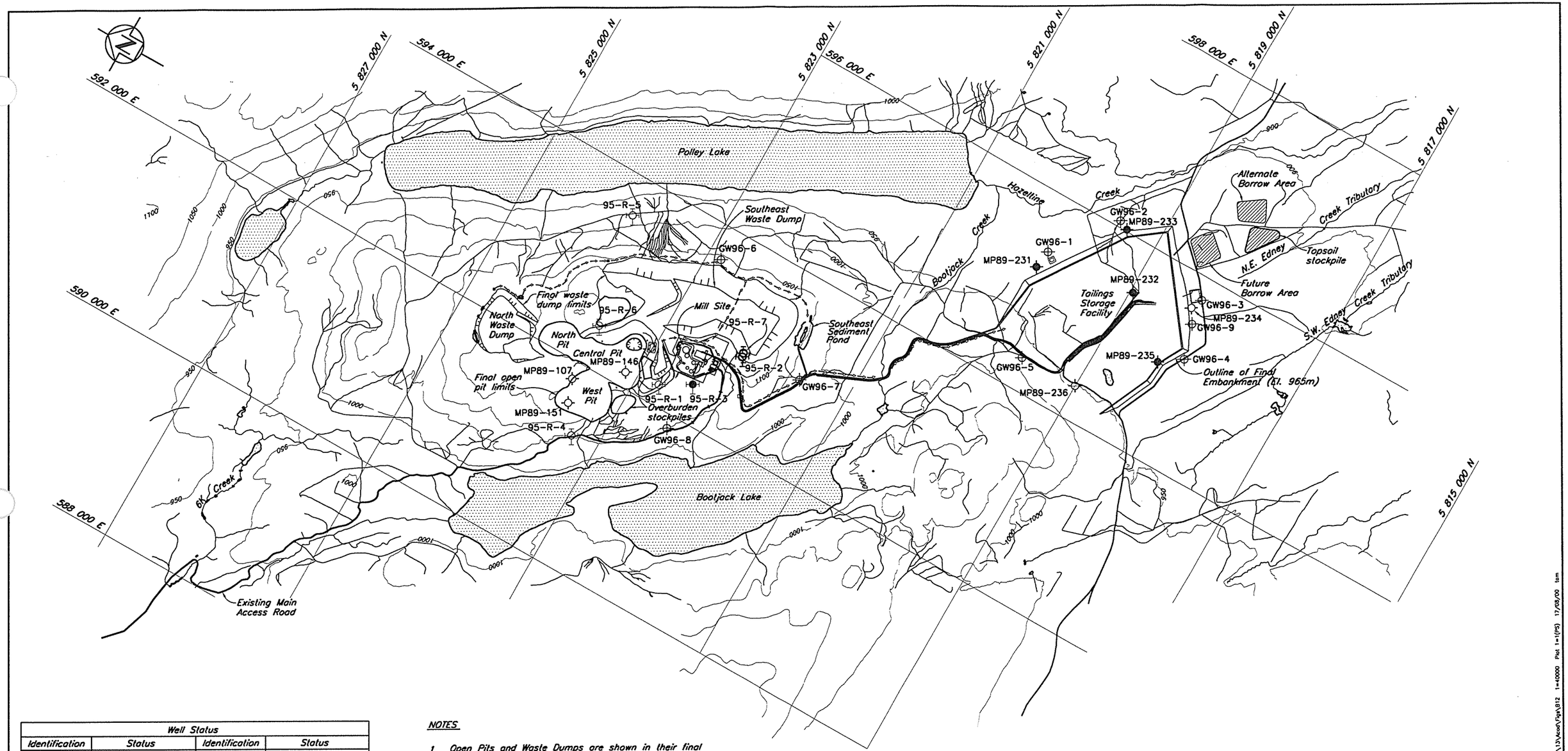

Well Status			
Identification	Status	Identification	Status
MP89-107	Unknown	GW96-1A	Good
MP89-146	Unknown	GW96-1B	Good
MP89-151	Unknown	GW96-2A	Good
MP89-231	Lost/Decommissioned	GW96-2B	Good
MP89-232	Decommissioned	GW96-3A	Good
MP89-233	Lost/Decommissioned	GW96-3B	Good
MP89-234	Good	GW96-4A	Good
MP89-235	Lost/Decommissioned	GW96-4B	Good
MP89-236	Broken, Repairable	GW96-5A	Good
95-R-1	Good	GW96-5B	Good
95-R-2	Good	GW96-6	Good
95-R-3	Blocked	GW96-7	Good
95-R-4	Good	GW96-8A	Good
95-R-5	Good	GW96-8B	Good
95-R-6	Good	GW96-9	Good
95-R-7	Good		

NOTES

1. Open Pits and Waste Dumps are shown in their final configurations.
2. 1989 Monitoring Wells consist of 38 mm PVC with slotted screens.
3. 1995 Monitoring Wells consist of 110mm PVC well pipe installed primarily as a water supply source. Wells are screened at multiple intervals.
4. Monitoring installation 95-R-3 has been blocked at a depth of approximatly 70 metres below the collar. This installation is no longer operable as a screen interval is not accessible.
5. 1996 Monitoring Wells consist of 50 mm PVC with one slotted screen section.
6. All previously installed monitoring wells with the tailing basin have been decommissioned.

LEGEND

MP89-107 — 1989 Groundwater Monitoring Well

GW96-1 — 1996 Groundwater Monitoring Well

Decommissioned / Lost Groundwater Well

95-R-4 — 1995 Groundwater Supply Well

Scale 400 0 400 800 1200 1600 2000 m

REV.	DATE	DESCRIPTION	DESIGNED	DRAWN	CHK'D	APP'D
A	17AUG'00	ISSUED FOR DRAFT REPORT	JBC	TAM	JRL	KJB

REVISIONS

MOUNT POLLEY MINING CORPORATION

MOUNT POLLEY PROJECT

GROUNDWATER MONITORING WELL LOCATION PLAN

Knight Piésold CONSULTING

PROJECT NO.	REF. NO.	REV.
11162/13	3	A

FIGURE 6.3

VANCOUVER B.C. CAD FILE: M:\11162\13\Acad\Figs\812 1=40000 Plot 1=1(PS) 17/08/00 tsm

XREF FILE : -

Knight Piésold
CONSULTING

DRAFT

APPENDIX A

DRAWINGS

Knight Piésold
CONSULTING

TABLE A1

MOUNT POLLEY MINING CORPORATION
MOUNT POLLEY MINE
TAILINGS STORAGE FACILITY

DRAWING LIST

M:\11162\13\Report\3\[drg-list.xls]Sheet1 Date Printed: 18-Aug-00

KP No.	Drawing No.	Rev. No.	Title	Date Issued
D13	11162-13-210	1	Tailings Storage Facility - Stage 3 Main Embankment - Plan - Option 2	17-May-00
D08	11162-13-215	1	Tailings Storage Facility - Stage 3 Main Embankment - Section - Option 2	17-May-00
D2	11162-12-120	2	Tailings Storage Facility - Stage 3 Perimeter Embankment - Plan	29-May-00
D5	11162-12-125	2	Tailings Storage Facility - Stage 3 Perimeter Embankment - Section	29-May-00
D7r0	11162-13-130	1	Tailings Storage Facility - Stage 3 South Embankment - Plan and Section	02-Jun-00
D15	11162-10-100	1	Overall Site Plan Showing Stage 2C Tailings Embankment	17-Aug-00
D16	11162-10-104	1	Tailings Storage Facility - Stage 2C Expansion - Materials Specifications	17-Aug-00
D11	11162-10-110	1	Tailings Storage Facility - Stage 2C Main Embankment - Plan	17-Aug-00
D13	11162-10-111	1	Tailings Storage Facility - Stage 2C Main Embankment - Sections	17-Aug-00
D12	11162-10-120	1	Tailings Storage Facility - Stage 2C Perimeter Embankment - Plan	17-Aug-00
D14	11162-10-121	1	Tailings Storage Facility - Stage 2C Perimeter Embankment - Sections	17-Aug-00
D17	11162-10-125	1	Tailings Storage Facility - Stage 2C Expansion - Embankment Drains Systems - Sections and Details	17-Aug-00
D18	11162-10-150	1	Tailings Storage Facility - Stage 2C Expansion - Main Embankment Instrumentation Plan	17-Aug-00
D19	11162-10-151	1	Tailings Storage Facility - Stage 2C Expansion - Perimeter Embankment Instrumentation Plan	17-Aug-00
D20	11162-10-152	1	Tailings Storage Facility - Stage 2C Expansion - Instrumentation Sections - Sheet 1 of 2	17-Aug-00
D21	11162-10-153	1	Tailings Storage Facility - Stage 2C Expansion - Instrumentation Sections - Sheet 2 of 2	17-Aug-00
D22	11162-10-154	0	Tailings Storage Facility - Stage 2C Expansion - Instrumentation Details	17-Aug-00
D22	1625.213	7	Tailings Storage Facility - Sediment Control and Seepage Collection	30-May-97
D23	1625.214	7	Tailings Storage Facility - Sediment Control and Seepage Collection - Sections and Details	30-May-97
D26	1625.218	7	Tailings Storage Facility - Tailings Distribution and Reclaim System - Plan	30-May-97
D27	1625.219	7	Tailings Storage Facility - Tailings Distribution and Reclaim System - Sections and Details	25-Jul-97
D42	1625.222	2	Tailings Storage Facility - Tailings Impoundment - Tailings and Reclaim Pipework Plan	14-Aug-97
D40	1625.223	1	Tailings Storage Facility - Reclaim Pipeline Details	30-May-97
D39	1625.224	1	Tailings Storage Facility - Tailings Distribution System - Details	30-May-97
D41	1625.225	2	Tailings Storage Facility - Tailings Pipework Details Drop Box No 2	14-Aug-97
D52	1625.226	2	Tailings Storage Facility - Reclaim Booster Pump Station Area - General Arrangement	14-Aug-97
D48	1625.228	2	Tailings Storage Facility - Tailings Impoundment - Tailings and Reclaim Pipework Profiles	14-Aug-97
D32	1625.230	5	Drainage Plan - Mine Site	08-May-97
D34	1625.231	6	Drainage Plan - Mill Site	30-May-97
D33	1625.232	5	Drainage Plan - Sections and Details	08-May-97
D6	1628.001	2	Pumping System - Plan, Profile and Section General Arrangement	19-Feb-97

595 000 E
595 500 E
596 000 E
5 819 000 N
5 818 500 N
5 818 000 N
Perimeter Embankment (see Drg. 120)
Main Embankment
Ch. 27+00
Ch. 26+00
Ch. 25+00
Ch. 24+00
Ch. 23+00
Ch. 22+00
Ch. 21+00
Ch. 20+00
Ch. 19+00
Ch. 18+00
Ch. 17+00
Ch. 16+00
Ch. 15+00
S5B
S5A
S5
S.O.L.
Existing U/S Toe Drain Outlet Pipe
Existing Zone T Road
Existing Toe Drain Conveyance Pipe
Borrow Area No. 2
Borrow Area No. 3
Existing Diversion Ditch
Tailings and Reclaim Water Pond assumed El. 938.0
OD-3
OD-2
OD-1
1:2
1/215
Drain Monitoring Sump
Main Embankment Seepage Collection Pond
Seepage Recycle Sump
Existing Topsoil Stockpile
South Embankment (see Drg. 130)
Main Embankment
Potential Basin Liner extension, see Note 6
S4B
S4A
S4
S1
Existing U/S Toe Drain Conveyance Pipe
Existing U/S Toe Drain Outlet Pipe
Bootjack–Morehead Connector Relocation
945
940
935
930
925
920
915
910
THIS DRAWING
KEY PLAN

NOTES

1. Chainage defined by Setting Out Point S1 at Ch. 5+00.
2. Stripping and clearing required 5 m beyond toe of embankments.
3. Pond elevation measured or estimated from Filling Schedule and Staged Construction Curve.
4. Topography was provided by MPMC on May 29/98. File: TSFBSP12.dwg
5. Tailings pipeworks not shown for clarity.
6. Basin liner to be expanded as determined in the field by the Engineer.

Scale 50 0 50 100 150 200 250 Metres

VANCOUVER B.C. CAD FILE: M:\11162\13\Acad\dwg\D13\D13 1=250 JRK (+1.00) 17/05/00 Dim

DRG. NO.	DESCRIPTION
215	TSF – STAGE 3 MAIN EMBANKMENT – SECTION – OPTION 2
130	TSF – STAGE 3 SOUTH EMBANKMENT – PLAN AND DETAILS
120	TSF – STAGE 3 PERIMETER EMBANKMENT – PLAN – OPTION 1

REFERENCE DRAWINGS

REV.	DATE	DESCRIPTION	DESIGN	DRAWN	CHK'D	APP'D

REVISIONS

REV.	DATE	DESCRIPTION	DESIGN	DRAWN	CHK'D	APP'D
1	17MAY'00	ISSUED FOR TENDER ADDENDUM 3	JRK	TAM	KJB	KJB
0	14APR'00	ISSUED FOR TENDER	JRK	WAL		

REVISIONS

PROFESSIONAL ENGINEER — PROVINCE OF BRITISH COLUMBIA — K. J. BROUWER

MOUNT POLLEY MINING CORPORATION

MOUNT POLLEY MINE

TAILINGS STORAGE FACILITY
STAGE 3 MAIN EMBANKMENT
PLAN
OPTION 2

DESIGNED	CHECKED
JRK	KJB
DRAWN	APPROVED
DSR/WAL	KJB

Knight Piésold CONSULTING

SCALE	REVISION
AS SHOWN	1

DRAWING NO. 11162–13–210

XREF FILE :

NOTES

1. For zone material specifications and legend see Drg. 104.
2. All dimensions in millimetres and elevations in metres, unless noted otherwise.
3. Geotextile Filter Fabric (8 oz./sq.yd.) to be placed on prepared ground from Ch. 17+00 to Ch. 23+00 as required.
4. Stripping and clearing required 5 m beyond toe of embankment.
5. Downstream fill buttress (1000 thick for Zone T and 4000 thick for Zone C) to be placed approximately from Ch. 17+00 to Ch. 23+00.
6. Cap off existing 150 mm CPT pipe. Close over drain gravel with 8 oz. yd2 non-woven geotextile. Inspection of drain works must be approved by the Engineers before placement of Zone T can occur over the drains.

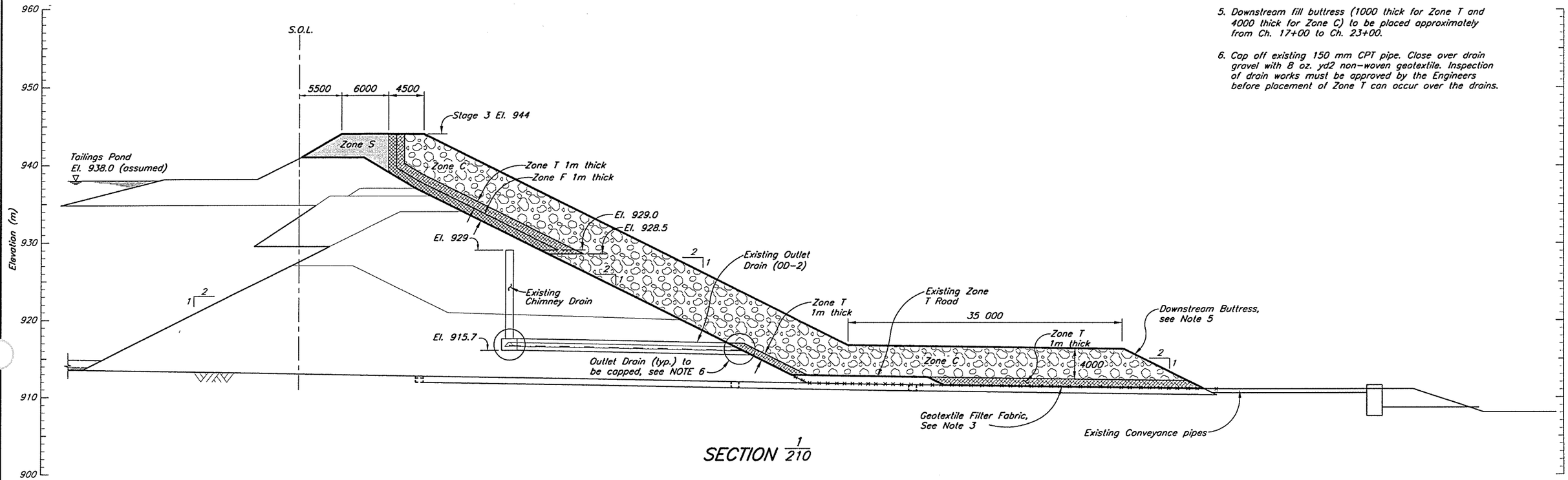

SECTION $\frac{1}{210}$

Scale 5 0 5 10 15 20 25 m

VANCOUVER B.C. CAD FILE: M:\11162\13\ACAD\dwgs\008\008 1=250 Plot 1=1(PS) 17/05/00 tom

DRG. NO.	DESCRIPTION
210	TSF – STAGE 3 MAIN EMBANKMENT – PLAN – OPTION 2
104	TSF – STAGE 3 – MATERIALS SPECIFICATIONS

REFERENCE DRAWINGS

REV.	DATE	DESCRIPTION	DESIGN	DRAWN	CHK'D	APP'D

REVISIONS

REV.	DATE	DESCRIPTION	DESIGN	DRAWN	CHK'D	APP'D
1	17MAY'00	ISSUED FOR TENDER ADDENDUM 3	JRK	TAM	KDB	KJB
0	14APR'00	ISSUED FOR TENDER	MDB	WAL		

REVISIONS

PROFESSIONAL ENGINEER — PROVINCE OF BRITISH COLUMBIA — K. J. BROUWER

MOUNT POLLEY MINING CORPORATION

MOUNT POLLEY MINE

TAILINGS STORAGE FACILITY
STAGE 3 MAIN EMBANKMENT
SECTION
OPTION 2

DESIGNED	CHECKED
MDB	KDB
DRAWN	APPROVED
DSR	KJB

Knight Piésold CONSULTING

SCALE: AS SHOWN

REVISION: 1

DRAWING NO. 11162-13-215

XREF FILE :

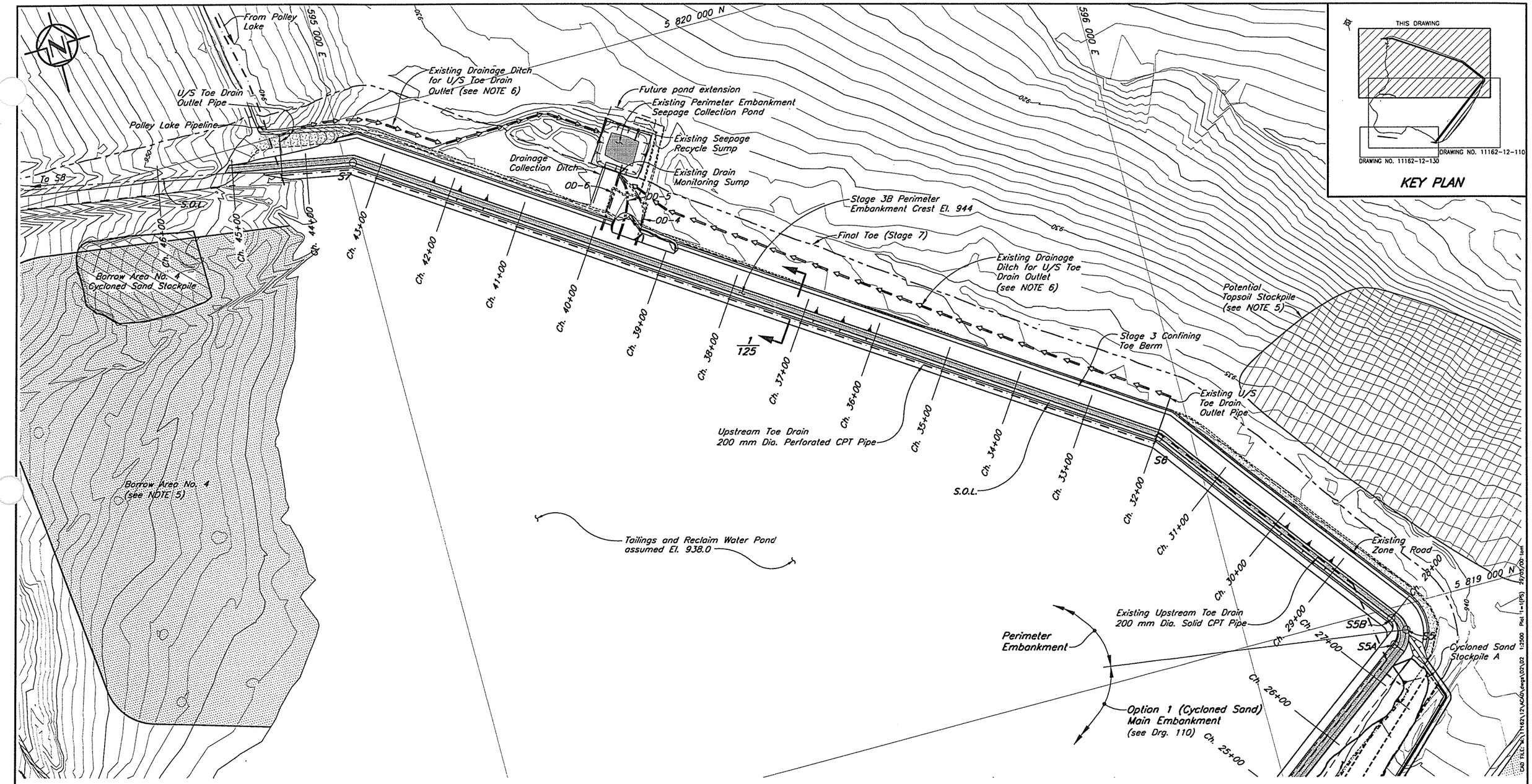

EMBANKMENT SETTING OUT POINTS			
Point	Northing	Easting	Chainage
S1	5 818 626.163	594 249.555	5+00.00
S4A	5 818 243.621	595 227.361	15+49.97
S4B	5 818 246.923	595 251.497	15+77.87
S4	5 818 238.539	595 240.350	15+63.92
S5A	5 818 951.971	596 188.906	27+50.83
S5B	5 818 986.958	596 193.873	28+00.78
S5	5 818 966.983	596 208.866	27+75.80
S6	5 819 304.035	595 955.881	31+97.23
S7	5 819 939.748	595 010.249	43+36.69
S8	5 820 053.034	594 396.471	49+60.83

NOTES

1. Chainage defined by Setting Out Point S1 at Ch. 5+00.
2. Stripping and clearing required 5 m beyond toe of embankments.
3. Topography at TSF generated from points and break lines sent from MPMC in July 1999. The Topography outside the TSF area is from 1997 flyover.
4. Tailings pipeline on embankment crest not shown for clarity.
5. Current size and location of potential and existing Borrow Areas and Topsoil Stockpiles are to be confirmed.
6. U/S Toe Drain Outlet Drainage Ditch to be extended as required to contain drainage water from cycloning operations.

LEGEND

OD-4 Outlet Drain No.4

Scale 50 0 50 100 150 200 250 m

NOT FOR CONSTRUCTION

DRG. NO.	DESCRIPTION
125	TSF – STAGE 3 PERIMETER EMBANKMENT – SECTIONS
115	TSF – STAGE 3 MAIN EMBANKMENT – SECTIONS AND DETAILS
110	TSF – STAGE 3 MAIN EMBANKMENT – PLAN

REFERENCE DRAWINGS

REV.	DATE	DESCRIPTION	DESIGN	DRAWN	CHK'D	APP'D

REVISIONS

REV.	DATE	DESCRIPTION	DESIGN	DRAWN	CHK'D	APP'D
2	29MAY'00	GENERAL REVISIONS, ISSUED FOR PERMITTING	JRK	TAM	KJB	KJB
1	14APR'00	GENERAL REVISIONS, ISSUED FOR ADDENDUM REPORT	MDB	NSD	JRK	KJB
0	10DEC99	ISSUED FOR DESIGN REPORT	MDB	NSD	LAG	KJB

REVISIONS

PROFESSIONAL ENGINEER — PROVINCE OF BRITISH COLUMBIA — K. J. BROUWER

MOUNT POLLEY MINING CORPORATIOON

MOUNT POLLEY MINE

TAILINGS STORAGE FACILITY
STAGE 3 PERIMETER EMBANKMENT
PLAN

DESIGNED	CHECKED	SCALE	REVISION
MDB	KJB	AS SHOWN	2
DRAWN	APPROVED	DRAWING NO.	
DSR	KJB	11162–12–120	

Knight Piésold CONSULTING

VANCOUVER B.C.

CAD FILE: N:\11162\12\ACAD\dwgs\120.02 1:2500 Plot 1=1(PS) 29/05/00 lamf

XREF FILE : TOPO99,STOCK99

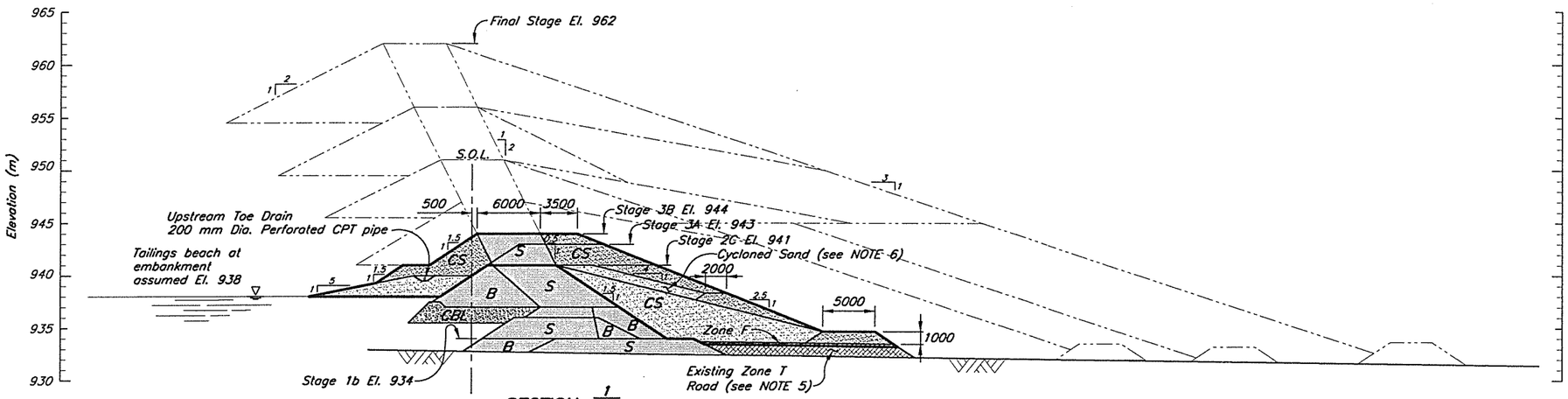

SECTION $\frac{1}{120}$

NOTES

1. All dimensions in millimetres with elevations in metres, unless noted otherwise.
2. Geotextile Filter Fabric (8 oz./sq.yd.) to be placed on prepared ground as required.
3. For zone material specification and legend see Drg. 104.
4. Crest elevations and details of ongoing embankment raises are preliminary only and will be modified during future design stages.
5. Zone T road to be ripped prior to Zone F placement.
6. Actual quantity of Cycloned Sand placed by hydraulic methods will depend on operating conditions. The remaining cycloned sand fill will be placed by mechanical methods

NOT FOR CONSTRUCTION

Scale 5 0 5 10 15 20 25 Metres

VANCOUVER B.C. CAD FILE: M:\11162\12\acad\dwg\05\05 1=250 Plot 1=0.25 29/05/00 tom

DRG. NO.	DESCRIPTION
120	TSF – STAGE 3 – PERIMETER EMBANKMENT – PLAN
104	TSF – STAGE 3 – MATERIAL SPECIFICATIONS

REFERENCE DRAWINGS

REV.	DATE	DESCRIPTION	DESIGN	DRAWN	CHK'D	APP'D

REVISIONS

REV.	DATE	DESCRIPTION	DESIGN	DRAWN	CHK'D	APP'D
2	29MAY'00	GENERAL REVISIONS, ISSUED FOR PERMITTING	JRK	TAM	[illegible]	KJB
1	20APR'00	GENERAL REVISIONS, ISSUED FOR ADDENDUM REPORT	MDB	TAM	JRK	KJB
0	10DEC'99	ISSUED FOR DESIGN REPORT	MDB	NSD	LAG	KJB

REVISIONS

PROFESSIONAL ENGINEER — PROVINCE OF BRITISH COLUMBIA — R. J. BROUWER

DESIGNED KDE
CHECKED [illegible]
DRAWN DSR
APPROVED KJB

MOUNT POLLEY MINE CORPORATION

MOUNT POLLEY MINE

TAILINGS STORAGE FACILITY
STAGE 3 PERIMETER EMBANKMENT
SECTION

Knight Piésold CONSULTING

SCALE AS SHOWN
REVISION 2
DRAWING NO. 11162–12–125

XREF FILE :

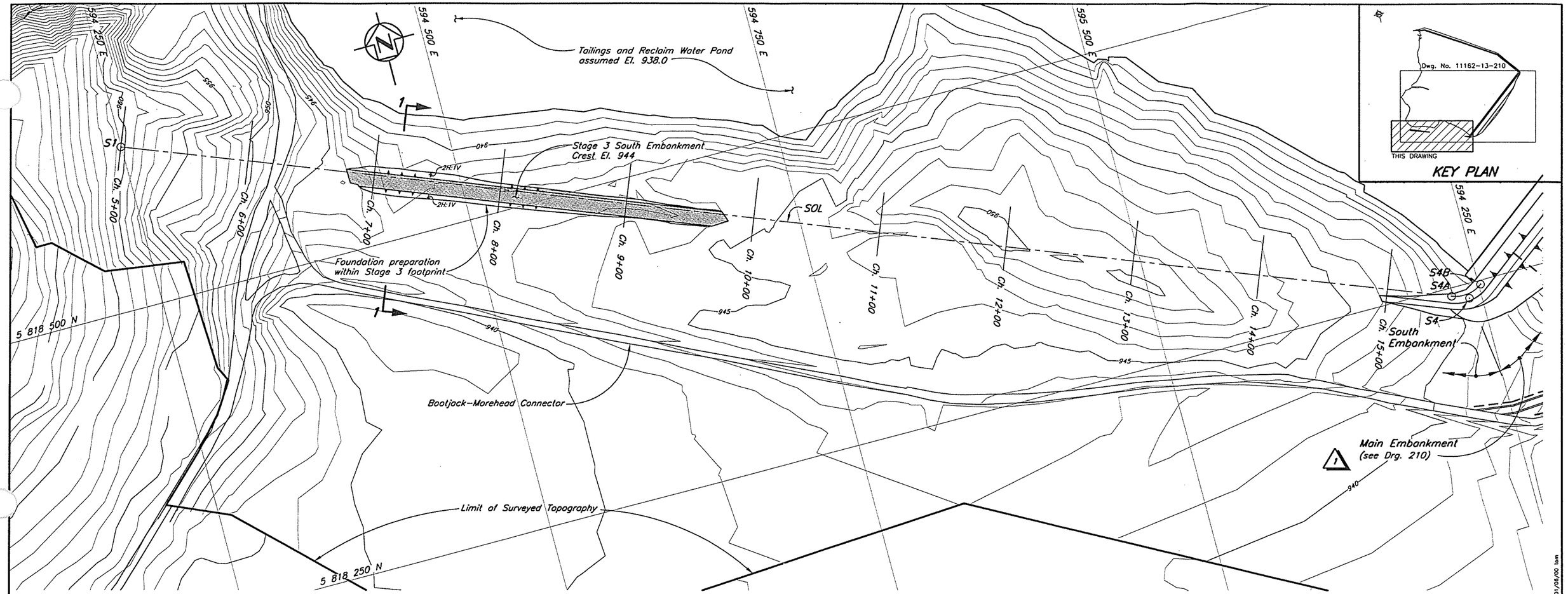

PLAN
Scale A

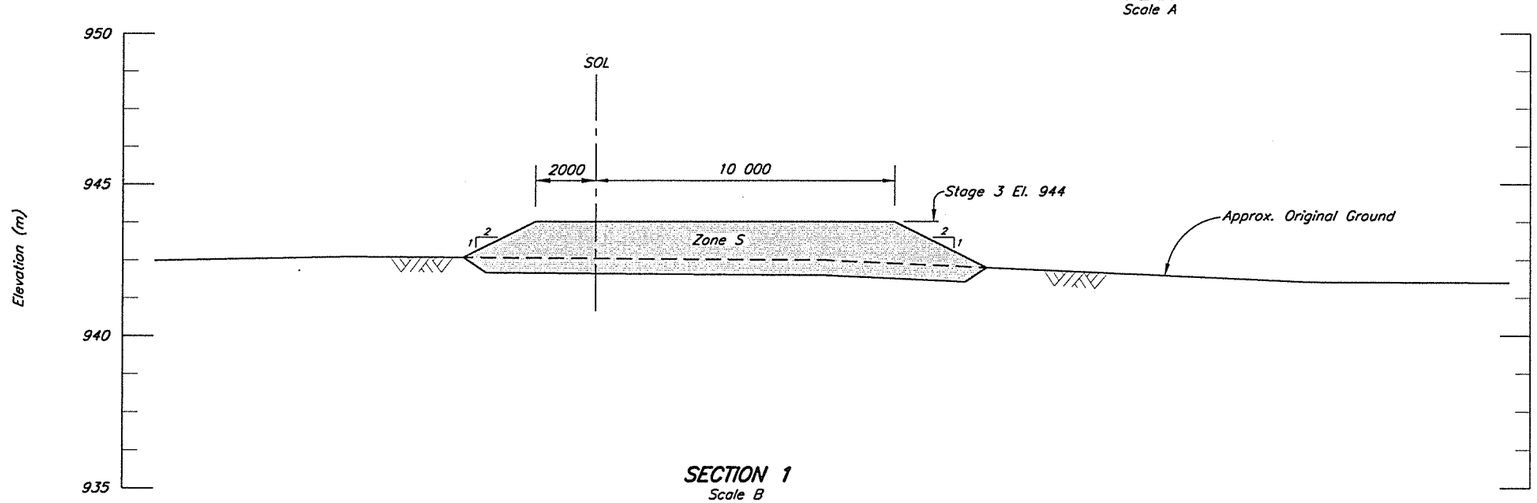

SECTION 1
Scale B

NOTES

1. All dimensions in millimeters and elevations in metres, unless noted otherwise.
2. Topography at TSF generated from points and break lines sent from MPMC in July 1999. The Topography outside the TSF area is from 1997 flyover.
3. For Zone Materials Specifications and legend, see Drg. 104.
4. Stripping and clearing required for 5 m beyond toe of embankment.

B 2 0 2 4 6 8 10 m

A 30 0 30 60 90 120 150 m

DRG. NO.	DESCRIPTION
210	TSF – STAGE 3 MAIN EMBANKMENT – PLAN
104	TSF – STAGE 3 TAILINGS EMBANKMENT – MATERIALS SPECIFICATIONS

REFERENCE DRAWINGS

REV.	DATE	DESCRIPTION	DESIGN	DRAWN	CHK'D	APP'D

REVISIONS

REV.	DATE	DESCRIPTION	DESIGN	DRAWN	CHK'D	APP'D
1	2JUN'00	ISSUED FOR CONSTRUCTION	MDB	TAM	KJB	KJB
0	14APR'00	ISSUED FOR TENDER	MDB	AW	JRK	KJB

REVISIONS

PROFESSIONAL ENGINEER — PROVINCE OF BRITISH COLUMBIA — K. J. BROUWER

MOUNT POLLEY MINING CORPORATION

MOUNT POLLEY PROJECT

TAILINGS STORAGE FACILITY
STAGE 3 SOUTH EMBANKMENT
PLAN AND SECTION

DESIGNED MDB | CHECKED KJB | DRAWN NSD | APPROVED KJB

Knight Piésold CONSULTING

SCALE AS SHOWN | REVISION 1 | DRAWING NO. 11162-13-130

XREF FILE : TOPO99, S3_SEL

VANCOUVER B.C. CAD FILE: M:\11162\13\Acad\dwg\007\007 1=1500 Plot 1=1(PS) 01/06/00 tam

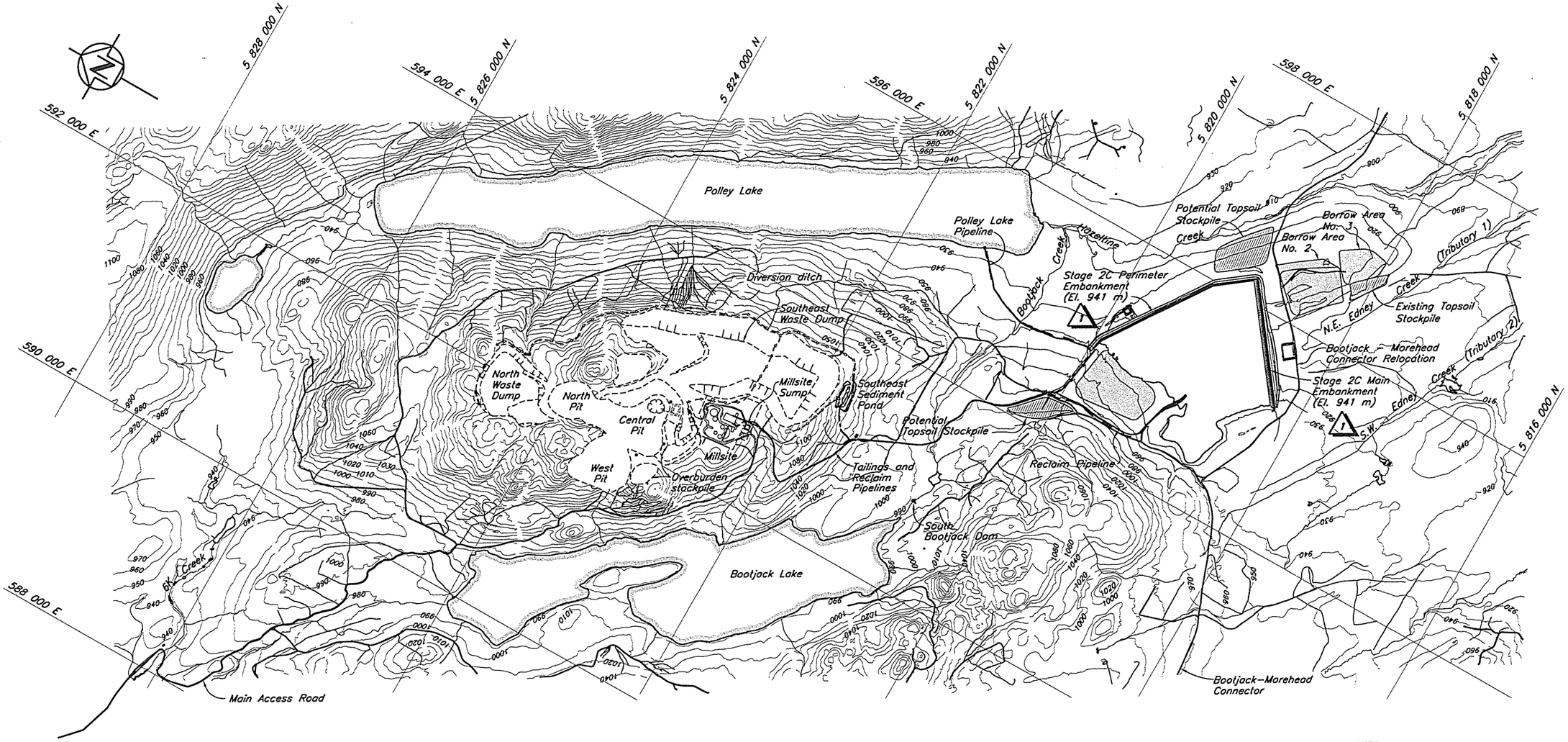

NOTES

1. Open Pits and Waste Dumps are shown in their final configurations.
2. Topography at TSF generated from points and break lines from MPMC in July 1999. The topography outside the TSF area is from 1997 flyover.

Scale 1000 500 0 1000 2000 m

VANCOUVER B.C. CAD FILE: M:\11162\10\ACAD\dwgs\0115\015 1=20000 Plot 1=20 08/08/00 1pm

XREF FILE : 10/10P099

DRG. NO.	DESCRIPTION
REFERENCE DRAWINGS	

REV.	DATE	DESCRIPTION	DESIGN	DRAWN	CHK'D	APP'D
		REVISIONS				

REV.	DATE	DESCRIPTION	DESIGN	DRAWN	CHK'D	APP'D
1	17AUG'00	STAGE 2C AS–BUILT	JRK	TAN		
0	26AUG99	ISSUED FOR CONSTRUCTION	JMTW	DSR	KJB	KJB
		REVISIONS				

PROFESSIONAL ENGINEER — PROVINCE OF BRITISH COLUMBIA — K. J. BROUWER

MOUNT POLLEY MINING CORPORATION

MOUNT POLLEY MINE

OVERALL SITE PLAN
SHOWING STAGE 2C TAILINGS EMBANKMENT

DESIGNED	CHECKED
JMTW	KJB
DRAWN	APPROVED
DSR	KJB

Knight Piésold CONSULTING

SCALE	REVISION
AS SHOWN	1
DRAWING NO.	
11162–10–100	

UNIFIED SOIL CLASSIFICATION SYSTEM

ZONE S and ZONE B

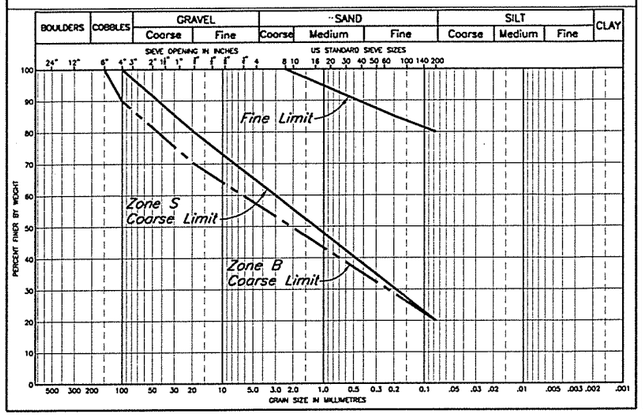

UNIFIED SOIL CLASSIFICATION SYSTEM

ZONE T

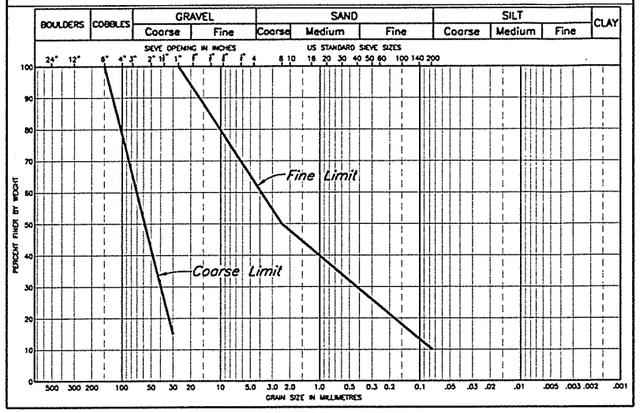

UNIFIED SOIL CLASSIFICATION SYSTEM

ZONE F

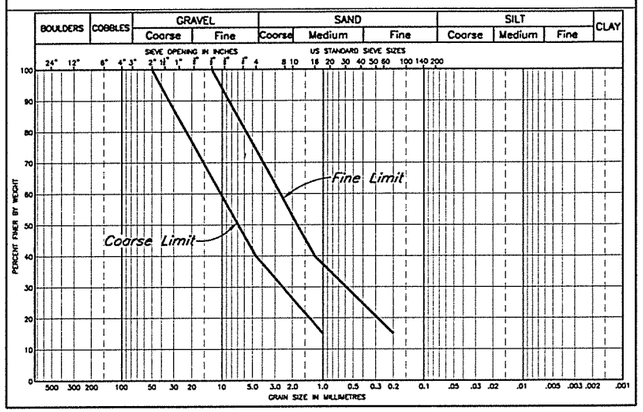

UNIFIED SOIL CLASSIFICATION SYSTEM

ZONE G

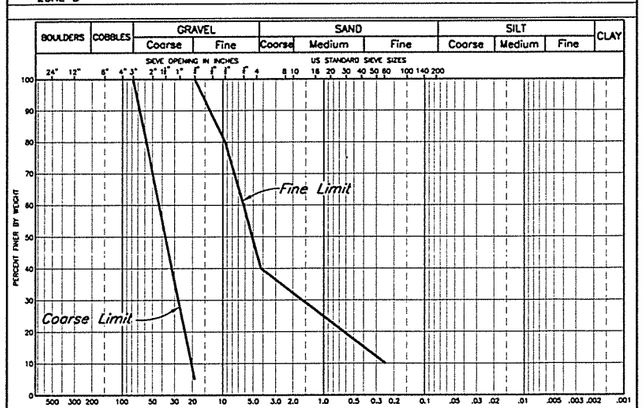

UNIFIED SOIL CLASSIFICATION SYSTEM

BASIN LINER

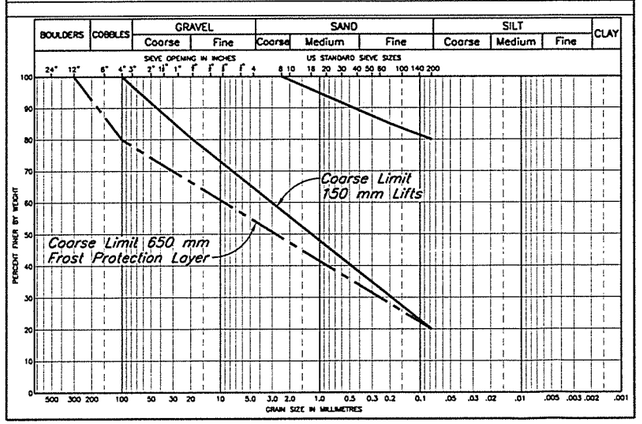

ZONE	LOCATION	MATERIAL TYPE	PLACEMENT AND COMPACTION REQUIREMENTS
S	Core Zone	Glacial till	Placed, moisture conditioned and spread in maximum 300 mm thick layers (after compaction). Vibratory compaction to 95% of Standard Proctor maximum dry density or as approved by the Engineer.
B	Fill Zone	Glacial till, glaciolacustrine or granular material	Placed, moisture conditioned and spread in maximum 1000 mm thick layers (after compaction). Vibratory compaction to 92% of Standard Proctor maximum dry density or as approved by the Engineer.
T	Transition Zone	Select Rockfill	Placed and spread in maximum 600 mm thick layers. Compaction as directed by the Engineer.
F	Chimney Drain	Filter sand	Placed and spread in maximum 600 mm thick lifts. Compaction as directed by the Engineer.
F	Longitudinal/ Outlet Drain	Filter Sand	Placed and spread carefully around filter fabric/drain gravel. Compaction as directed by the Engineer.
G	Foundation/ Longitudinal/ Outlet Drain	Drain Gravel	Placed and spread carefully around seepage collection pipes. Compaction as directed by the Engineer.
CBL	Coarse Bearing Layer	Random Rockfill	End dumped and spread as required for trafficability and fill placement.
–	Basin Liner	Glacial till, glaciolacustrine material	Placed and spread in maximum 150 mm thick lifts. Compacted to 92% of the Standard Proctor Maximum Dry Density, or as approved by the Engineer.
–	Basin Liner Frost Protection	Glacial till, glaciolacustrine or granular material	Placed and spread in maximum 300 mm thick lift. Compaction as directed by the Engineer.

CAD FILE: M:\11162\10\ACAD\dwgs\016\016 1=1000 Plot 1=1.0 17\08\00 tom

VANCOUVER B.C.

PROFESSIONAL ENGINEER — PROVINCE OF BRITISH COLUMBIA — K. J. BROUWER

MOUNT POLLEY MINING CORPORATION

MOUNT POLLEY MINE

TAILINGS STORAGE FACILITY
STAGE 2C EXPANSION
MATERIALS SPECIFICATIONS

DRG. NO.	DESCRIPTION
	REFERENCE DRAWINGS

REV.	DATE	DESCRIPTION	DESIGN	DRAWN	CHK'D	APP'D
		REVISIONS				

REV.	DATE	DESCRIPTION	DESIGN	DRAWN	CHK'D	APP'D
1	17AUG'00	STAGE 2C AS-BUILT	JRK	TAM	KJB	KJB
0	26AUG99	ISSUED FOR CONSTRUCTION	JMTW	DSR	KJB	KJB
		REVISIONS				

DESIGNED	CHECKED
JMTW	KJB
DRAWN	APPROVED
DSR	KJB

Knight Piésold CONSULTING

SCALE: AS SHOWN — REVISION: 1

DRAWING NO. 11162-10-104

XREF FILE :

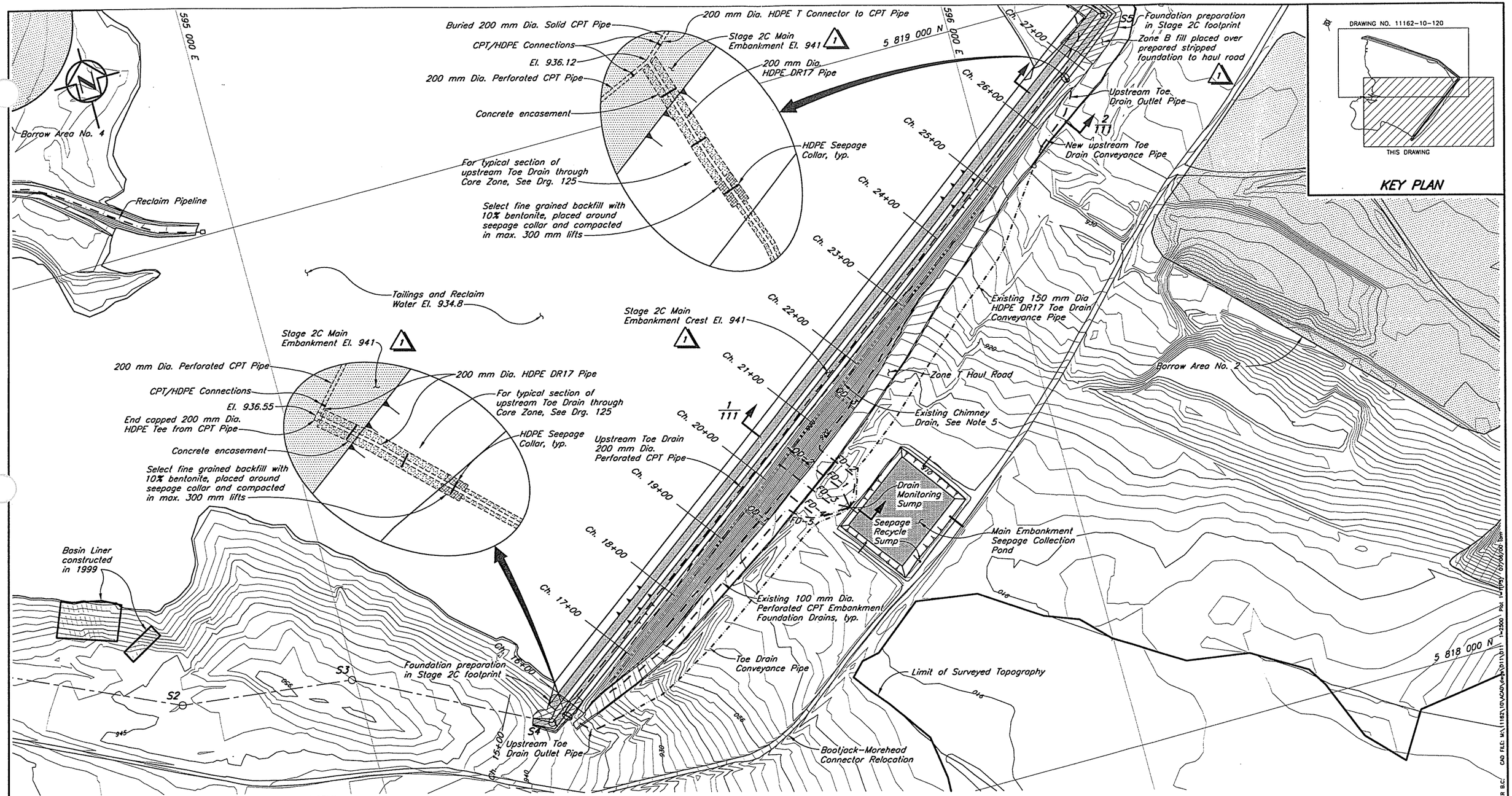

EMBANKMENT SETTING OUT POINTS			
Point	Northing	Easting	Chainage
S1	5 818 622.590	594 258.688	5+00.00
S2	5 818 392.402	594 765.778	10+56.89
S3	5 818 365.375	594 995.246	12+87.94
S4	5 818 238.539	595 240.350	15+63.92
S5	5 818 966.983	596 208.866	27+75.80
S6	5 819 304.035	595 955.881	31+97.23
S7	5 819 939.748	595 010.249	43+36.69
S8	5 820 053.034	594 396.471	49+60.83

NOTES

1. Chainage defined by Setting Out Point S1 at Ch. 5+00.
2. Stripping and clearing to 5 m beyond toe of embankments.
3. Topography generated from points and break lines provided by MPMC on July 20, 1999.
4. Tailings pipeline on embankment crest not shown for clarity.
5. Longitudinal (collector) Drain for Chimney Drain installed to invert El. 929 (Stage 1b)

ORG. NO.	DESCRIPTION
111	TSF – STAGE 2C MAIN EMBANKMENT – SECTIONS

REFERENCE DRAWINGS

REV.	DATE	DESCRIPTION	DESIGN	DRAWN	CHK'D	APP'D

REVISIONS

REV.	DATE	DESCRIPTION	DESIGN	DRAWN	CHK'D	APP'D
1	17AUG'00	STAGE 2C AS-BUILT	JRK	TAN	TAN	KJB
0	26AUG99	ISSUED FOR CONSTRUCTION	JMTW	DSR	KJB	KJB

REVISIONS

PROFESSIONAL ENGINEER — PROVINCE OF BRITISH COLUMBIA — K. J. BROUWER

MOUNT POLLEY MINING CORPORATION

MOUNT POLLEY MINE

TAILINGS STORAGE FACILITY
STAGE 2C MAIN EMBANKMENT
PLAN

DESIGNED	CHECKED
JMTW	KJB
DRAWN	APPROVED
DSR	KJB

Knight Piésold CONSULTING

SCALE: AS SHOWN
REVISION: 1
DRAWING NO. 11162-10-110

XREF FILE : TOPO99,STOCK99

CAD FILE: M:\11162\10\ACAD\dwg\011\011 1=2500 Plot 1=1(PDF) 07AUG01.dwg

VANCOUVER B.C.

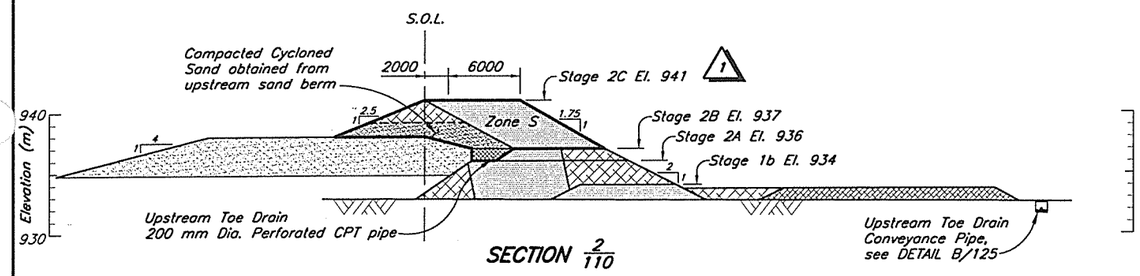

SECTION 2/110

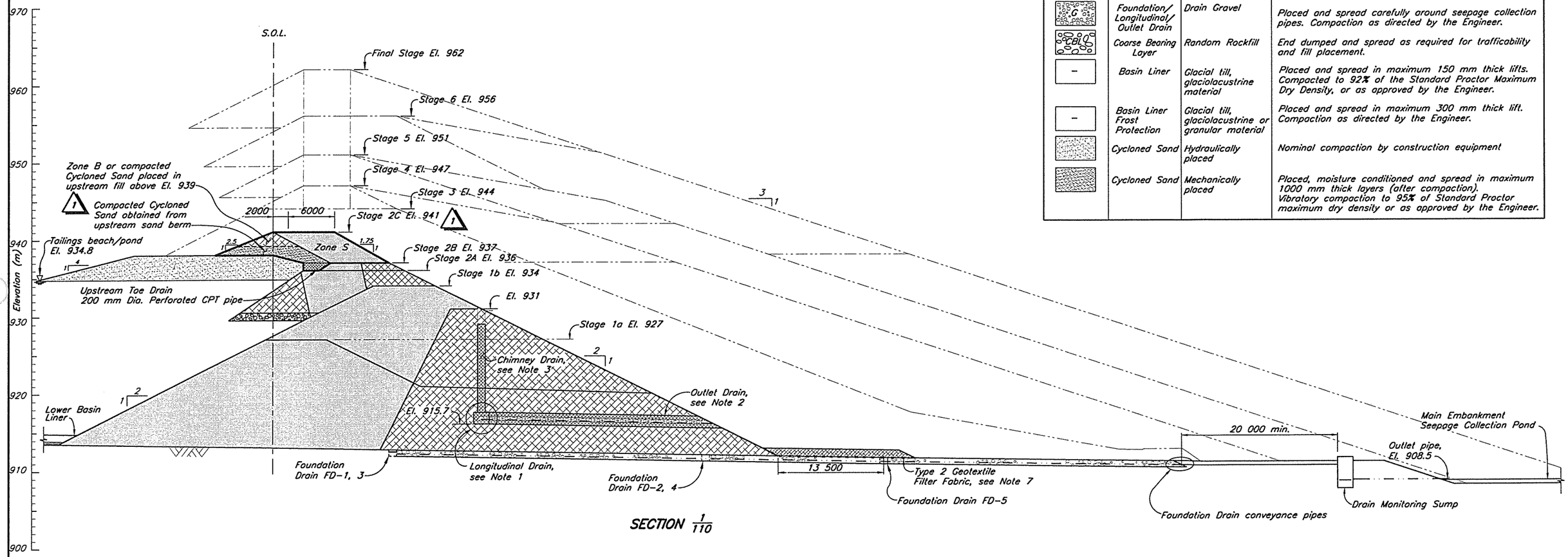

SECTION 1/110

ZONE	LOCATION	MATERIAL TYPE	PLACEMENT AND COMPACTION REQUIREMENTS
S	Core Zone	Glacial till	Placed, moisture conditioned and spread in maximum 300 mm thick layers (after compaction). Vibratory compaction to 95% of Standard Proctor maximum dry density or as approved by the Engineer.
B	Fill Zone	Glacial till, glaciolacustrine or granular material	Placed, moisture conditioned and spread in maximum 1000 mm thick layers (after compaction). Vibratory compaction to 92% of Standard Proctor maximum dry density or as approved by the Engineer.
T	Transition Zone	Select Rockfill	Placed and spread in maximum 600 mm thick layers. Compaction as directed by the Engineer.
F	Chimney Drain	Filter sand	Placed and spread in maximum 600 mm thick lifts. Compaction as directed by the Engineer.
F	Longitudinal/ Outlet Drain	Filter Sand	Placed and spread carefully around filter fabric/drain gravel. Compaction as directed by the Engineer.
G	Foundation/ Longitudinal/ Outlet Drain	Drain Gravel	Placed and spread carefully around seepage collection pipes. Compaction as directed by the Engineer.
CBL	Coarse Bearing Layer	Random Rockfill	End dumped and spread as required for trafficability and fill placement.
–	Basin Liner	Glacial till, glaciolacustrine material	Placed and spread in maximum 150 mm thick lifts. Compacted to 92% of the Standard Proctor Maximum Dry Density, or as approved by the Engineer.
–	Basin Liner Frost Protection	Glacial till, glaciolacustrine or granular material	Placed and spread in maximum 300 mm thick lift. Compaction as directed by the Engineer.
	Cycloned Sand	Hydraulically placed	Nominal compaction by construction equipment
	Cycloned Sand	Mechanically placed	Placed, moisture conditioned and spread in maximum 1000 mm thick layers (after compaction). Vibratory compaction to 95% of Standard Proctor maximum dry density or as approved by the Engineer.

NOTES

1. Longitudinal Drain constructed to invert El. 929 (Stage 1b)
2. Outlet Drains to be extended to Drain Monitoring Sump during Stage 3, if required.
3. Chimney drain to be extended during Stage 3, if required.
4. Fill placement rates monitored by the Engineer. Placement rates modified if excess pore pressures observed in fill or foundation piezometers.
5. All dimensions in millimetres and elevations in metres, unless noted otherwise.
6. Type 1 (12 oz./sq.yd.) Geotextile Filter Fabric placed on tailings as required.
7. Type 2 (8 oz./sq.yd.) Geotextile Filter Fabric placed from the right abutment (approx. Ch. 15+75) to El. 920.0 m on the left abutment (approx. Ch. 23+00).
8. Not all Foundation Drains are intersected on this cross section.
9. Crest elevations and details of ongoing embankment raises are preliminary only and will be modified during future design stages.
10. Foundation drains are offset from section. For drain alignment see Drg. 110.

Scale 5 0 5 10 15 20 25 Metres

PROFESSIONAL ENGINEER — PROVINCE OF BRITISH COLUMBIA — K. J. BROUWER

MOUNT POLLEY MINING CORPORATION

MOUNT POLLEY MINE

TAILINGS STORAGE FACILITY
STAGE 2C MAIN EMBANKMENT
SECTIONS

Knight Piésold CONSULTING

DRG. NO.	DESCRIPTION
110	TSF – STAGE 2C MAIN EMBANKMENT – PLAN

REFERENCE DRAWINGS

REV.	DATE	DESCRIPTION	DESIGN	DRAWN	CHK'D	APP'D

REVISIONS

REV.	DATE	DESCRIPTION	DESIGN	DRAWN	CHK'D	APP'D
1	17AUG'00	STAGE 2C AS-BUILT	JRK	TAM		
0	26AUG99	ISSUED FOR CONSTRUCTION	JMTW	DSR	KJB	KJB

REVISIONS

DESIGNED	CHECKED
JMTW	KJB
DRAWN	APPROVED
DSR	KJB

SCALE: AS SHOWN
REVISION: 1
DRAWING NO. 11162–10–111

XREF FILE :

CAD FILE: M:\11162\10\ACAD\dwgs\D13\D13 1=250 Plot 1=0.25 08/08/00 bm

VANCOUVER B.C.

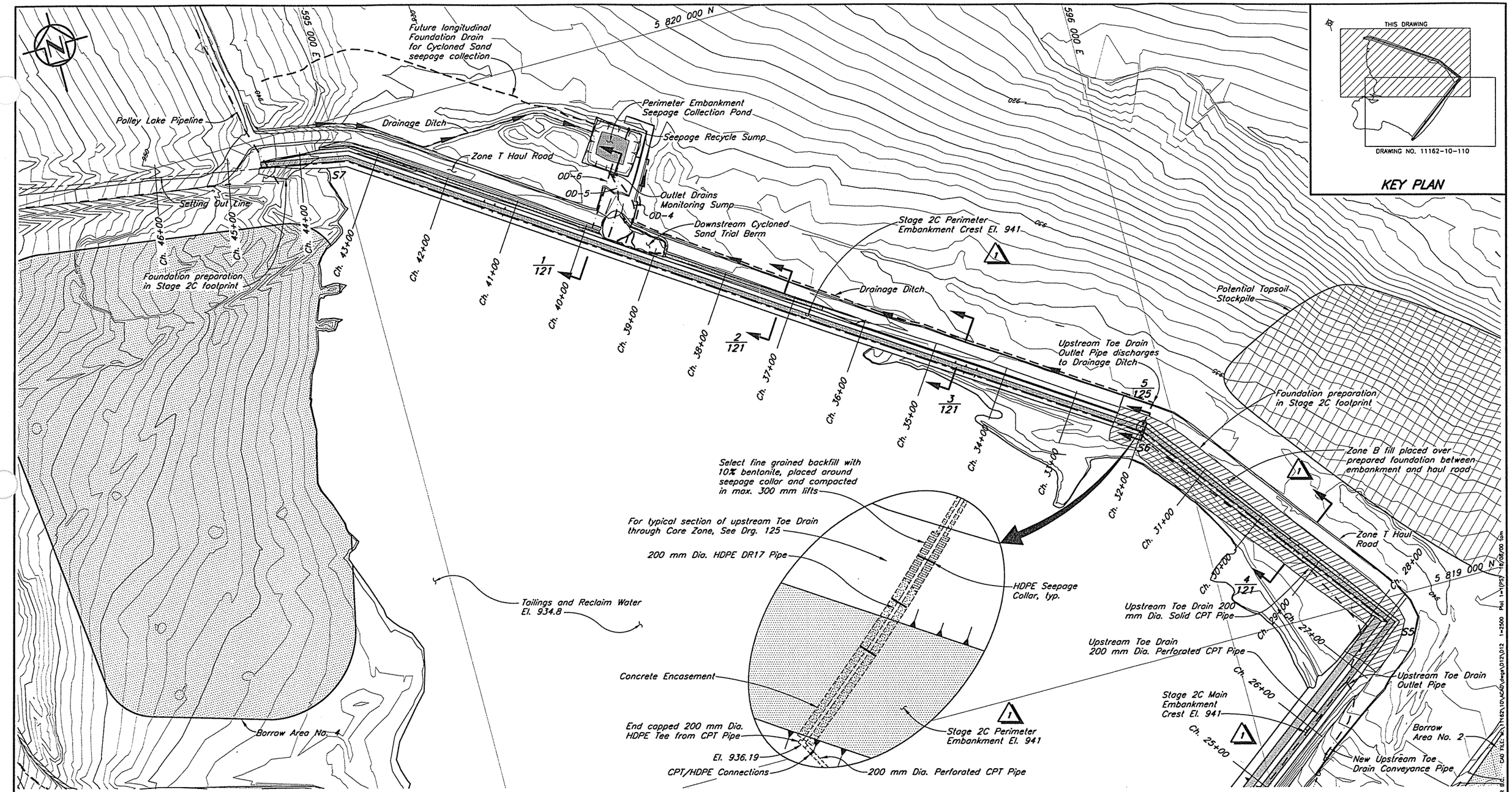

EMBANKMENT SETTING OUT POINTS			
Point	Northing	Easting	Chainage
S1	5 818 622.590	594 258.688	5+00.00
S2	5 818 392.402	594 765.778	10+56.89
S3	5 818 365.375	594 995.246	12+87.94
S4	5 818 238.539	595 240.350	15+63.92
S5	5 818 966.983	596 208.866	27+75.80
S6	5 819 304.035	595 955.881	31+97.23
S7	5 819 939.748	595 010.249	43+36.69
S8	5 820 053.034	594 396.471	49+60.83

NOTES

1. Chainage defined by Setting Out Point S1 at Ch. 5+00.
2. Stripping and clearing to 5 m beyond toe of embankments.
3. Topography generated from points and break lines provided by MPMC on July 20, 1999.
4. Tailings pipeline on embankment crest not shown for clarity.
5. Perimeter Embankment Upstream Toe Drain not installed. Solid CPT end capped and extended through upstream face of embankment at Ch. 32+00.

DRG. NO.	DESCRIPTION
125	TSF – STAGE 2C EXPANSION – EMBANKMENT DRAIN SYSTEMS – SECTIONS AND DETAILS
121	TSF – STAGE 2C PERIMETER EMBANKMENT – SECTIONS
111	TSF – STAGE 2C MAIN EMBANKMENT – SECTIONS

REFERENCE DRAWINGS

REV.	DATE	DESCRIPTION	DESIGN	DRAWN	CHK'D	APP'D

REVISIONS

REV.	DATE	DESCRIPTION	DESIGN	DRAWN	CHK'D	APP'D
1	17AUG'00	STAGE 2C AS-BUILT	JRK	TAM	KJB	KJB
0	26AUG99	ISSUED FOR CONSTRUCTION	JMTW	DSR	KJB	KJB

REVISIONS

PROFESSIONAL ENGINEER — PROVINCE OF BRITISH COLUMBIA — K. J. BROUWER

MOUNT POLLEY MINING CORPORATIOON

MOUNT POLLEY MINE

TAILINGS STORAGE FACILITY
STAGE 2C PERIMETER EMBANKMENT
PLAN

DESIGNED	CHECKED
JMTW	KJB
DRAWN	APPROVED
DSR	KJB

Knight Piésold CONSULTING

SCALE: AS SHOWN — REVISION: 1

DRAWING NO. 11162-10-120

XREF FILE : TOPO99,STOCK99

VANCOUVER B.C. — CAD FILE: \11162\10\CAD\dwgs\012\012 1=2500 Plot 1=1(PS) 16/08/00 tom

NOTES

1. Longitudinal Drain to be installed in future construction programs, if required.
2. Outlet Drains installed to Stage 1b crest during Stage 2A. Penetration at Drain Monitoring Sump already made. Pipe stubs are capped and backfilled.
3. Fill placement rates monitored by the Engineer. Placement rates modified if excess pore pressures observed in fill or foundation piezometers.
4. All dimensions in millimetres with elevations in metres, unless noted otherwise.
5. Type 2 (8 oz./sq.yd.) Geotextile Filter Fabric only required on prepared ground below El. 932.0 m.
6. Existing Perimeter Embankment Seepage Collection Pond to be relocated beyond final embankment toe as required.
7. Crest elevations and details of ongoing embankment raises are preliminary only and will be modified during future design stages.
8. Perimeter Embankment Upstream Toe Drain not installed.
9. Coarse bearing layer placed on tailings beach to make up for shortfall in upstream cycloned sand.
10. Zone B or coarse bearing layer substituted for cycloned sand.

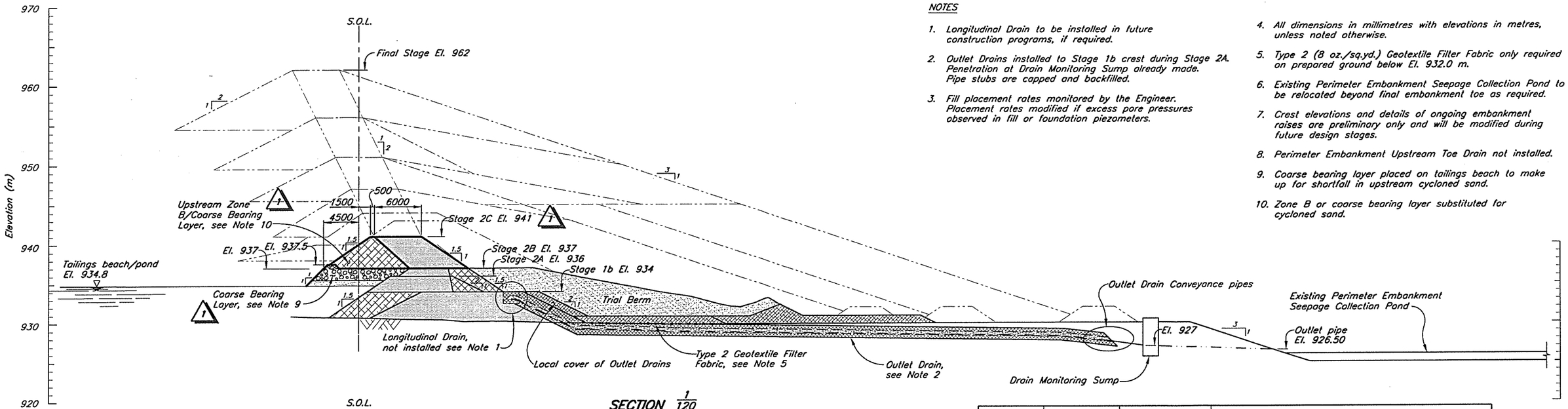

SECTION 1/120

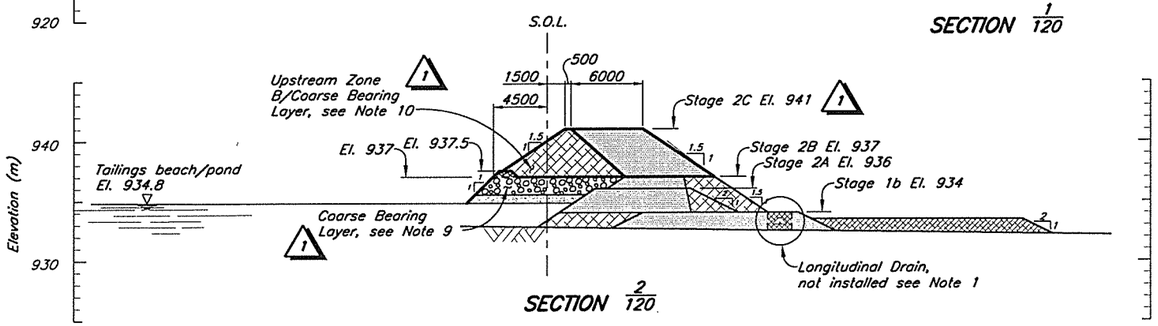

SECTION 2/120

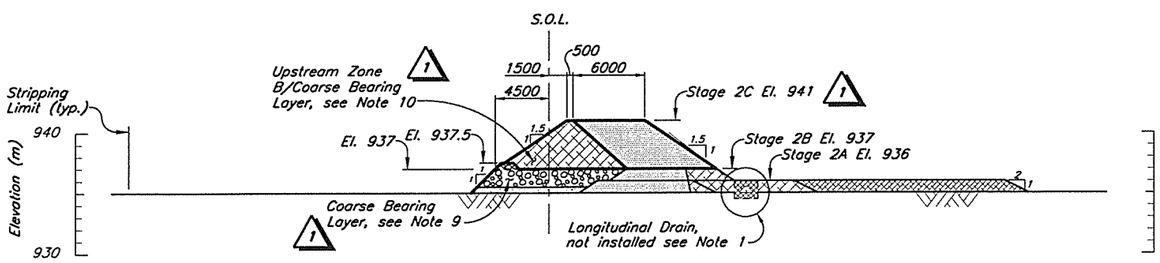

SECTION 3/120

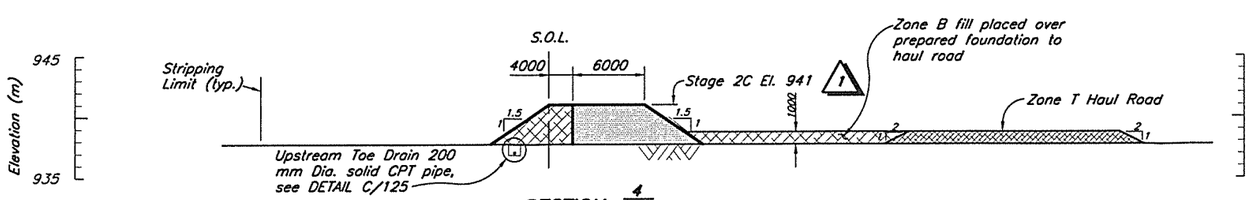

SECTION 4/120

ZONE	LOCATION	MATERIAL TYPE	PLACEMENT AND COMPACTION REQUIREMENTS
S	Core Zone	Glacial till	Placed, moisture conditioned and spread in maximum 300 mm thick layers (after compaction). Vibratory compaction to 95% of Standard Proctor maximum dry density or as approved by the Engineer.
B	Fill Zone	Glacial till, glaciolacustrine or granular material	Placed, moisture conditioned and spread in maximum 1000 mm thick layers (after compaction). Vibratory compaction to 92% of Standard Proctor maximum dry density or as approved by the Engineer.
T	Transition Zone	Select Rockfill	Placed and spread in maximum 600 mm thick layers. Compaction as directed by the Engineer.
F	Chimney Drain	Filter sand	Placed and spread in maximum 600 mm thick lifts. Compaction as directed by the Engineer.
F	Longitudinal/ Outlet Drain	Filter Sand	Placed and spread carefully around filter fabric/drain gravel. Compaction as directed by the Engineer.
G	Foundation/ Longitudinal/ Outlet Drain	Drain Gravel	Placed and spread carefully around seepage collection pipes. Compaction as directed by the Engineer.
CBL	Coarse Bearing Layer	Random Rockfill	End dumped and spread as required for trafficability and fill placement.
–	Basin Liner	Glacial till, glaciolacustrine material	Placed and spread in maximum 150 mm thick lifts. Compacted to 92% of the Standard Proctor Maximum Dry Density, or as approved by the Engineer.
–	Basin Liner Frost Protection	Glacial till, glaciolacustrine or granular material	Placed and spread in maximum 300 mm thick lift. Compaction as directed by the Engineer.
	Cycloned Sand	Hydraulically placed	Nominal compaction by construction equipment
	Cycloned Sand	Mechanically placed	Placed, moisture conditioned and spread in maximum 1000 mm thick layers (after compaction). Vibratory compaction to 95% of Standard Proctor maximum dry density or as approved by the Engineer.

Scale 5 0 5 10 15 20 25 Metres

DRG. NO.	DESCRIPTION
125	TSF – STAGE 2C EXPANSION – EMBANKMENT DRAINS SYSTEMS – SECTIONS AND DETAILS
120	TSF – STAGE 2C PERIMETER EMBANKMENT – PLAN

REFERENCE DRAWINGS

REV.	DATE	DESCRIPTION	DESIGN	DRAWN	CHK'D	APP'D

REVISIONS

REV.	DATE	DESCRIPTION	DESIGN	DRAWN	CHK'D	APP'D
1	17AUG'00	STAGE 2C AS-BUILT	JRK	TAM	KJB	KJB
0	26AUG99	ISSUED FOR CONSTRUCTION	JMTW	DSR	KJB	KJB

REVISIONS

PROFESSIONAL ENGINEER — PROVINCE OF BRITISH COLUMBIA — K. J. BROUWER

MOUNT POLLEY MINE CORPORATION

MOUNT POLLEY MINE

TAILINGS STORAGE FACILITY
STAGE 2C PERIMETER EMBANKMENT
SECTIONS

DESIGNED	CHECKED
JMTW	KJB
DRAWN	APPROVED
DSR	KJB

Knight Piésold CONSULTING

SCALE: AS SHOWN
REVISION: 1
DRAWING NO. 11162–10–121

XREF FILE :

VANCOUVER B.C. CAD FILE: M:\11162\10\ACAD\dwgs\D14\D14 1=250 Plot 1=0.25 08/08/00 tam

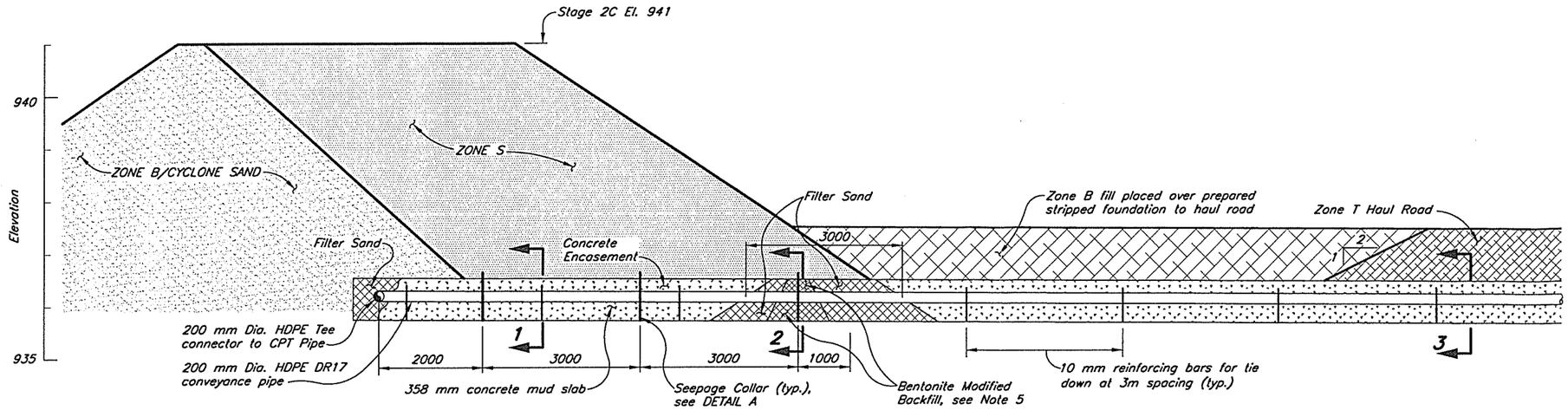

SECTION 5/120

TYPICAL SECTION OF UPSTREAM TOE DRAIN THROUGH CORE ZONE

Scale A

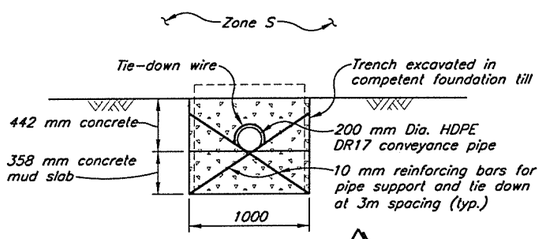

SECTION 1

Scale B

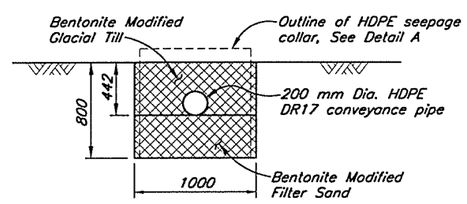

SECTION 2

Scale B

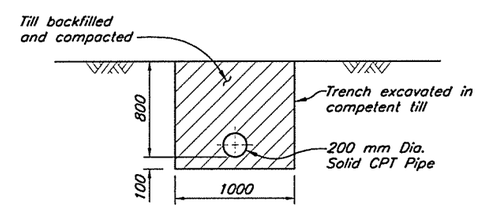

DETAIL C/121

Scale B

NOTES

1. Subgrade preparation comprised stripping of topsoil and organics and removing saturated materials to establish a competent bearing surface for fill placement as directed by the Engineer.
2. All downstream pipeworks have a minimum of 1 m of cover for frost protection.
3. All HDPE pipe penetrations to be water tight.
4. HDPE seepage collar fabricated and welded to pipe prior to delivery to site.
5. Select fine grained backfill and filter sand below with 10% bentonite, placed and compacted in max. 300 mm lifts.

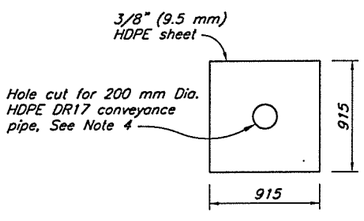

DETAIL A

HDPE Seepage Collar

Scale B

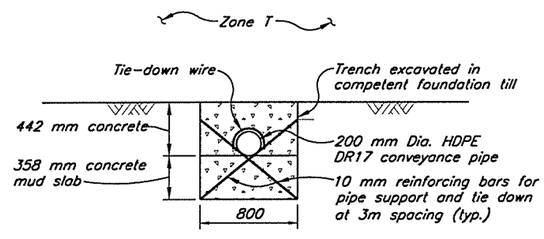

SECTION 3

Scale B

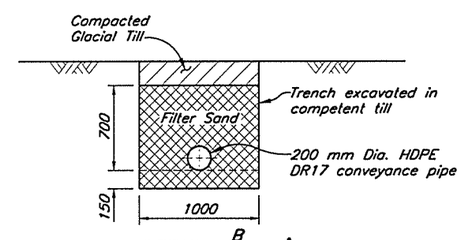

DETAIL B/111

Scale B

Scale B 0.5 0 0.5 1 1.5 2 2.5 m

Scale A 1 0 1 2 3 4 5 m

VANCOUVER B.C. CAD FILE: M:\11162\10\ACAD\Dwgs\017\017 1=50 Plot 1=1(PS) 18/08/00 1am

PROFESSIONAL ENGINEER — PROVINCE OF BRITISH COLUMBIA — K. J. BROUWER

MOUNT POLLEY MINING CORPORATION

MOUNT POLLEY MINE

TAILINGS STORAGE FACILITY
STAGE 2C EXPANSION
EMBANKMENT DRAIN SYSTEMS
SECTIONS AND DETAILS

DESIGNED	CHECKED
JMTW	KJB
DRAWN	APPROVED
DSR	KJB

Knight Piésold CONSULTING

SCALE: AS SHOWN — REVISION: 1

DRAWING NO. 11162-10-125

XREF FILE :

REFERENCE DRAWINGS

DRG. NO.	DESCRIPTION
121	TSF - STAGE 2C PERIMETER EMBANKMENT - SECTION
120	TSF - STAGE 2C PERIMETER EMBANKMENT - PLAN

REVISIONS

REV.	DATE	DESCRIPTION	DESIGN	DRAWN	CHK'D	APP'D
1	17AUG'00	STAGE 2C AS-BUILT	IBM	DSR		KJB
0	26AUG99	ISSUED FOR CONSTRUCTION	JMTW	DSR	KJB	KJB

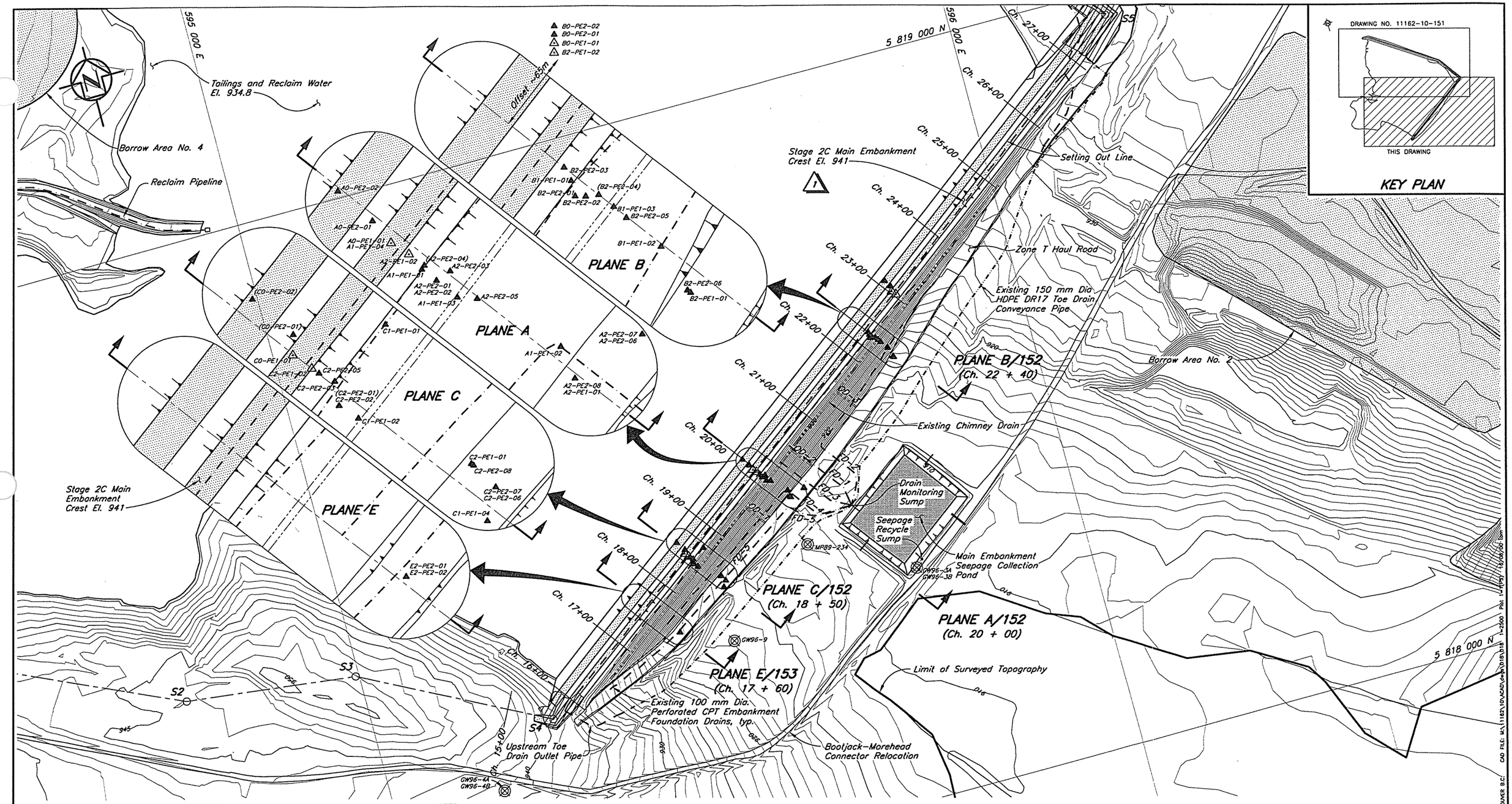

LEGEND

- Groundwater Monitoring Well
- A1-PE1-01 Previously installed Piezometer
- A2-PE2-06 New Stage 2C Piezometer
- A2-SM-01 New Embankment Survey Monument

NOTES

1. Chainage defined by Setting Out Point S1 at Ch. 5+00.
2. Topography generated from points and break lines sent from MPMC on July 20, 1999.
3. Stage 2 survey monuments destroyed immediately after installation.
4. See Drg. No. 11162-10-152 for Summary of Instrumentation Installations.

Scale 50 0 50 100 150 200 250 m

DRG. NO.	DESCRIPTION
153	TSF – STAGE 2C EXPANSION – INSTRUMENTATION SECTIONS – SHEET 2 OF 2
152	TSF – STAGE 2C EXPANSION – INSTRUMENTATION SECTIONS – SHEET 1 OF 2

REFERENCE DRAWINGS

REV.	DATE	DESCRIPTION	DESIGN	DRAWN	CHK'D	APP'D

REVISIONS

REV.	DATE	DESCRIPTION	DESIGN	DRAWN	CHK'D	APP'D
1	17AUG'00	STAGE 2C AS-BUILT	JRK	TAM	KJB	KJB
0	31AUG99	ISSUED FOR CONSTRUCTION	JMTW	DSR	KJB	KJB

REVISIONS

PROFESSIONAL ENGINEER — PROVINCE OF BRITISH COLUMBIA — K. J. BROUWER

MOUNT POLLEY MINING CORPORATION

MOUNT POLLEY MINE

TAILINGS STORAGE FACILITY
STAGE 2C EXPANSION
MAIN EMBANKMENT INSTRUMENTATION
PLAN

DESIGNED	CHECKED
JMTW	KJB
DRAWN	APPROVED
DSR	KJB

Knight Piésold CONSULTING

SCALE: AS SHOWN — REVISION: 1

DRAWING NO. 11162-10-150

XREF FILE : TOPO99,STOCK99

VANCOUVER B.C. CAD FILE: M:\11162\10\ACAD\dwg\D18\D18 1=2500 Plot 1:4 (PDF) 16/08/00 8pm

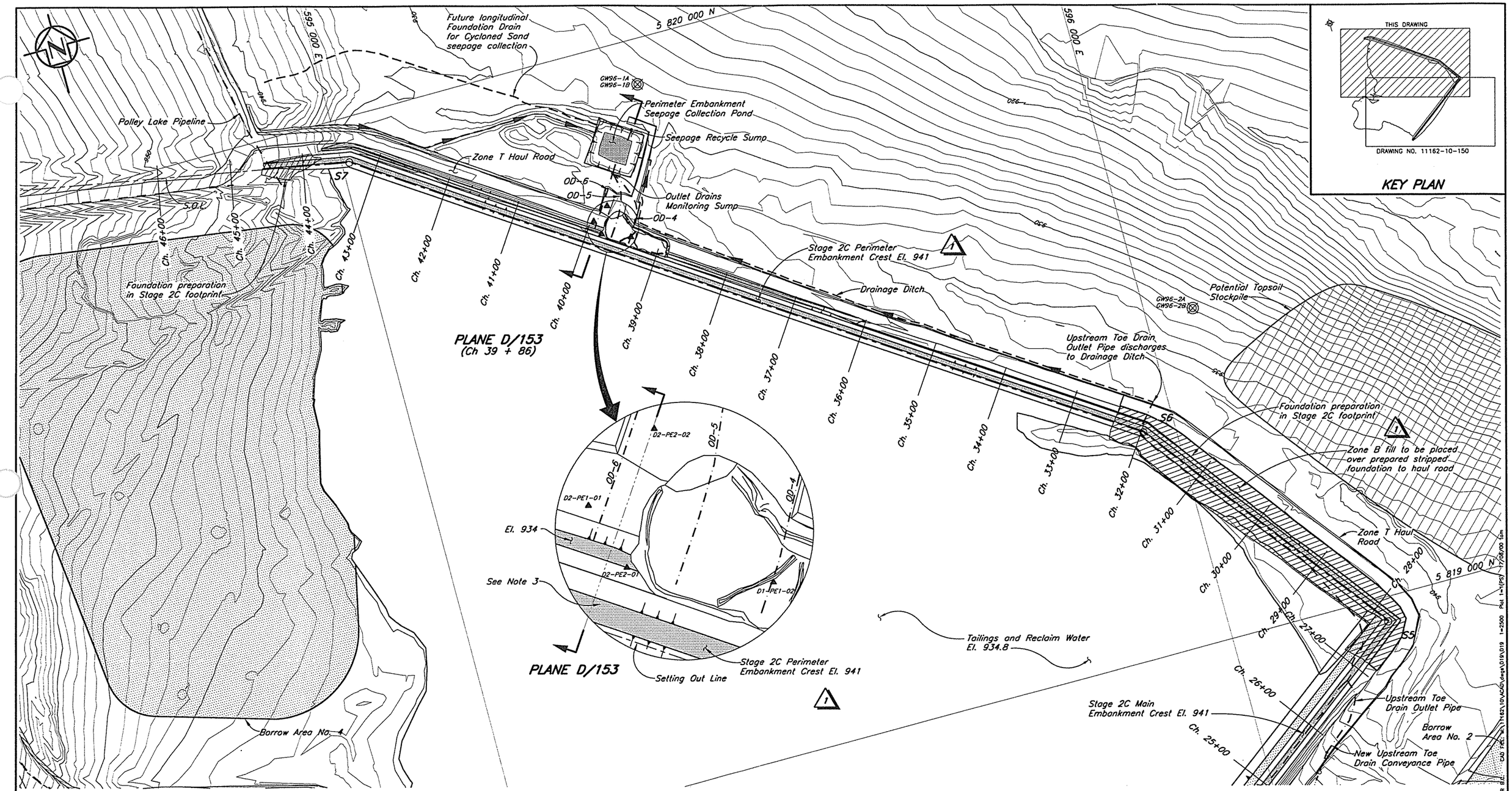

LEGEND

- Groundwater Monitoring Well
- A1-PE1-01 Previously installed Piezometer
- A2-PE2-06 New Stage 2C Piezometer
- A2-SM-01 New Embankment Survey Monument

NOTES

1. Chainage defined by Setting Out Point S1 at Ch. 5+00.
2. Topography generated from points and break lines provided by MPMC on July 20, 1999.
3. Stage 2 survey monuments destroyed immediately after installation.
4. See Drg. No. 11162-10-152 for Summary of Instrumentation Installations.

Scale 50 0 50 100 150 200 250 m

ORG. NO.	DESCRIPTION
153	TSF – STAGE 2C EXPANSION – INSTRUMENTATION SECTIONS – SHEET 2 OF 2
152	TSF – STAGE 2C EXPANSION – INSTRUMENTATION SECTIONS – SHEET 1 OF 2

REFERENCE DRAWINGS

REV.	DATE	DESCRIPTION	DESIGN	DRAWN	CHK'D	APP'D

REVISIONS

REV.	DATE	DESCRIPTION	DESIGN	DRAWN	CHK'D	APP'D
1	14AUG'00	STAGE 2C AS-BUILT	JRK	TAM	JMTW	KJB
0	31AUG99	ISSUED FOR CONSTRUCTION	JMTW	DSR	KJB	KJB

REVISIONS

PROFESSIONAL ENGINEER — PROVINCE OF BRITISH COLUMBIA — K. J. BROUWER

MOUNT POLLEY MINING CORPORATIOON

MOUNT POLLEY MINE

TAILINGS STORAGE FACILITY
STAGE 2C EXPANSION
PERIMETER EMBANKMENT INSTRUMENTATION PLAN

DESIGNED	CHECKED
JMTW	KJB
DRAWN	APPROVED
DSR	KJB

Knight Piésold CONSULTING

SCALE: AS SHOWN
REVISION: 1
DRAWING NO. 11162-10-151

XREF FILE : TOPO99,STOCK99

VANCOUVER B.C. CAD FILE: n:\11162\10\ACAD\dwgs\D153\D153 1=2500 Plot 1=1(PS) 17/08/00 10am

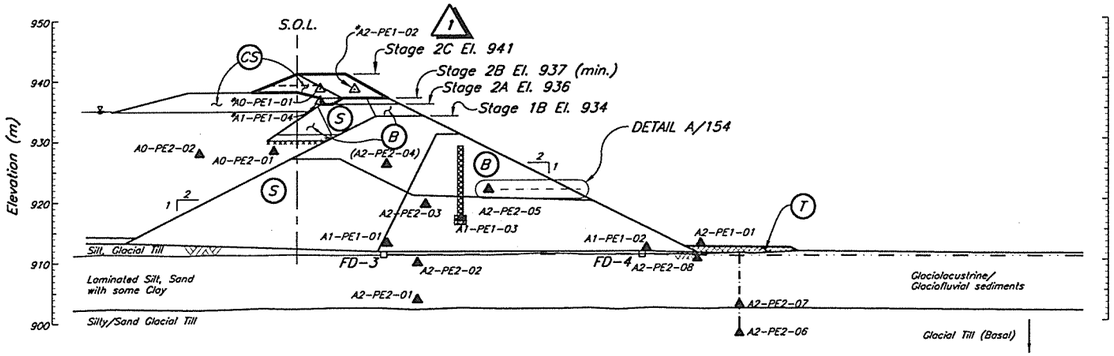

PLANE $\frac{A}{150}$
CH. 20+00

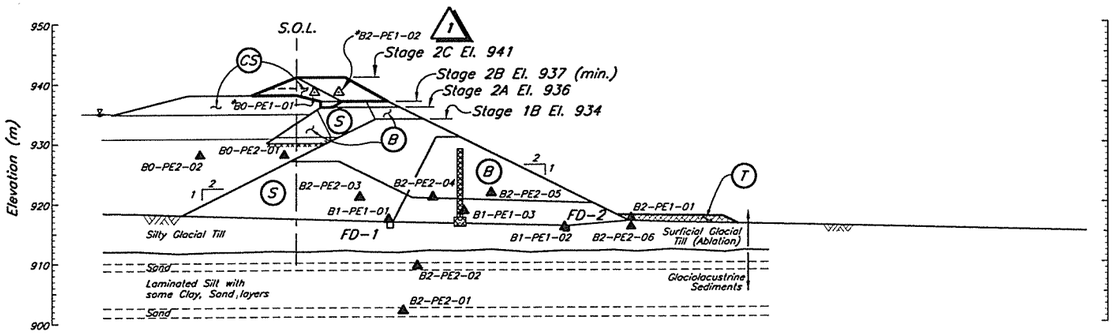

PLANE $\frac{B}{150}$
CH. 22+40

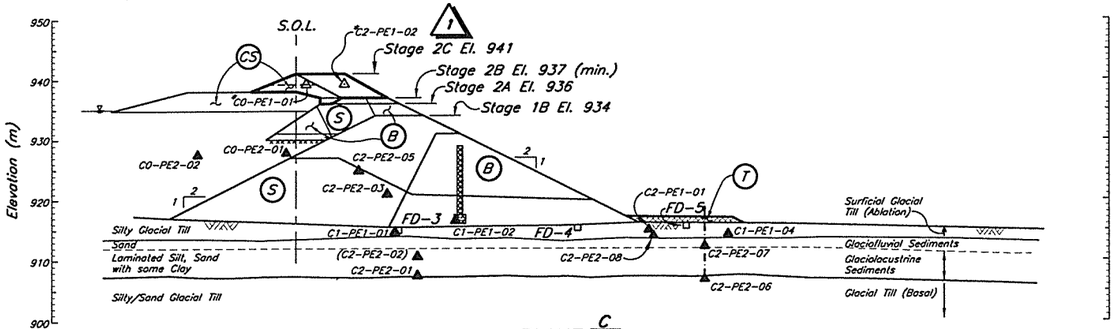

PLANE $\frac{C}{150}$
CH. 18+50

SUMMARY OF INSTRUMENTATION INSTALLATIONS

PIEZOMETER ID	NORTHING	EASTING	ELEV.	DATE INSTALLED
*A0-PE1-01	5 818 495.773	595 588.746	938.542	
A0-PE2-01	5 818 502.850	595 585.398	928.03	10/03/98
A0-PE2-02	5 818 513.092	595 578.418	927.87	10/03/98
A1-PE1-01	5 818 486.650	595 595.060	912.99	27/08/96
A1-PE1-02	5 818 456.420	595 626.250	912.14	27/08/96
A1-PE1-03	5 818 476.822	595 602.380	917.17	22/10/96
*A1-PE1-04			936.5	
A2-PE1-01	5 818 446.550	595 628.010	912.89	26/08/98
*A2-PE1-02	5 818 491.574	595 592.678	938.474	
A2-PE2-01	5 818 482.710	595 598.140	903.7	25/07/96
A2-PE2-02	5 818 482.710	595 598.140	909.8	25/07/96
A2-PE2-03	5 818 484.196	595 602.354	919.43	12/02/97
(A2-PE2-04)	5 818 487.510	595 595.995	926.07	22/02/97
A2-PE2-05	5 818 475.061	595 607.560	921.87	22/02/97
A2-PE2-06	5 818 453.926	595 648.458	898.03	21/06/98
A2-PE2-07	5 818 453.926	595 648.458	902.83	21/06/98
A2-PE2-08	5 818 447.045	595 627.758	907.57	23/06/98
*B0-PE1-01			938.5	
B0-PE2-01	5 818 688.130	595 833.040	927.30	06/03/98
B0-PE2-02	5 818 697.980	595 326.160	927.18	06/03/98
B1-PE1-01	5 818 632.550	595 787.910	917.27	10/09/96
B1-PE1-02	5 818 609.040	595 806.770	915.95	10/09/96
B1-PE1-03	5 818 622.780	595 797.260	918.69	22/10/96
B2-PE1-01	5 818 594.940	595 811.260	916.272	26/08/98
*B2-PE1-02			938.5	
B2-PE2-01	5 818 628.270	595 787.880	902.00	25/07/96
B2-PE2-02	5 818 627.470	595 790.660	909.50	25/07/96
B2-PE2-03	5 818 636.530	595 786.970	921.00	22/10/96
(B2-PE2-04)	5 818 626.940	595 794.190	921.00	22/10/96
B2-PE2-05	5 818 619.014	595 799.804	921.70	14/03/97
B2-PE2-06	5 818 595.767	595 810.605	914.59	23/06/98
*C0-PE1-01	5 818 408.969	595 469.750	939.267	
(C0-PE2-01)	5 818 414.319	595 471.099	927.80	10/03/98
(C0-PE2-02)	5 818 426.495	595 463.101	927.48	10/03/98
C1-PE1-01	5 818 410.500	595 496.070	914.70	28/09/96
C1-PE1-02	5 818 387.690	595 482.400	916.60	22/10/96
C1-PE1-04	5 818 351.420	595 509.060	914.31	02/04/98
C2-PE1-01	5 818 367.670	595 508.900	915.016	26/08/98
*C2-PE1-02	5 818 404.117	595 473.754	939.260	
(C2-PE2-01)	5 818 392.410	595 478.240	907.50	25/07/96
C2-PE2-02	5 818 392.410	595 478.240	910.50	25/07/96
C2-PE2-03	5 818 399.106	595 478.824	920.97	12/02/97
C2-PE2-05	5 818 402.343	595 475.326	924.84	12/02/97
C2-PE2-06	5 818 359.734	595 513.663	906.84	18/06/98
C2-PE2-07	5 818 359.734	595 513.663	912.28	18/06/98
C2-PE2-08	5 818 367.087	595 509.351	914.03	19/06/98
–			–	
D1-PE1-02	5 819 742.03	595 353.980	928.76	30/01/98
–			–	
D2-PE1-01	5 819 775.449	595 310.522	930.423	26/08/98
–			–	
D2-PE2-01	5 819 756.360	595 316.210	931.00	15/12/96
D2-PE2-02	5 819 791.103	595 333.275	922	22/06/98
E2-PE2-01	5 818 307.454	595 435.983	914.19	17/06/98
E2-PE2-02	5 818 307.454	595 435.983	909.67	17/06/98

( ) Piezometer no longer functioning.
* Installed during Stage 2C construction.

NOTES

1. Piezometers are vibrating wire type, SINCA Model 52611030 and RST Model 45005-0100 with a pressure rating of 100 psi or equivalent, connected to a readout panel via standard non-vented direct burial cable.
2. Piezometer leads extended as directed by the Engineer.

LEGEND

A0-PE1-01
- Plane I.D. (A, B etc.)
- Area (0-Tailings, 1-Drain, 2-Embankment)
- Number I.D.
- Pressure Rating (1-Low, 2-High)
- Type of Instrumentation (PE-Piezometer electric, SM-Survey Monument)

A1-PE1-01 ▲ Previously installed Piezometer

A2-PE2-06 △ New Stage 2C Piezometer

A2-SM-01 ◇ New Embankment Survey Monument

(B) Zone B

(C) Zone C

(S) Zone S

(T) Zone T

(CS) Cycloned Sand

Scale 10 0 10 20 30 40 50 m

VANCOUVER B.C. CAD FILE: M:\11162\10\ACAD\Engg\020\020 1=500 Plot 1=0.5 17/08/00 lam

DRG. NO.	DESCRIPTION
154	TSF – STAGE 2C EXPANSION – INSTRUMENTATION – DETAILS
153	TSF – STAGE 2C EXPANSION – INSTRUMENTATION SECTIONS – SHEET 2 OF 2
151	TSF – STAGE 2C EXPANSION – PERIMETER EMBANKMENT INSTRUMENTATION – PLAN
150	TSF – STAGE 2C EXPANSION – MAIN EMBANKMENT INSTRUMENTATION – PLAN

REFERENCE DRAWINGS

REV.	DATE	DESCRIPTION	DESIGN	DRAWN	CHK'D	APP'D

REVISIONS

REV.	DATE	DESCRIPTION	DESIGN	DRAWN	CHK'D	APP'D
1	14AUG'00	STAGE 2C AS BUILT	JRK	TAM		KJB
0	31AUG99	ISSUED FOR CONSTRUCTION	JMTW	DSR	KJB	KJB

REVISIONS

PROFESSIONAL ENGINEER — PROVINCE OF BRITISH COLUMBIA — K.J. BROUWER

MOUNT POLLEY MINING CORPORATION

MOUNT POLLEY MINE

TAILINGS STORAGE FACILITY
STAGE 2C EXPANSION
INSTRUMENTATION SECTIONS
SHEET 1 OF 2

DESIGNED	CHECKED
JMTW	KJB
DRAWN	APPROVED
DSR	KJB

Knight Piésold CONSULTING

SCALE: AS SHOWN
REVISION: 1
DRAWING NO. 11162-10-152

XREF FILE :

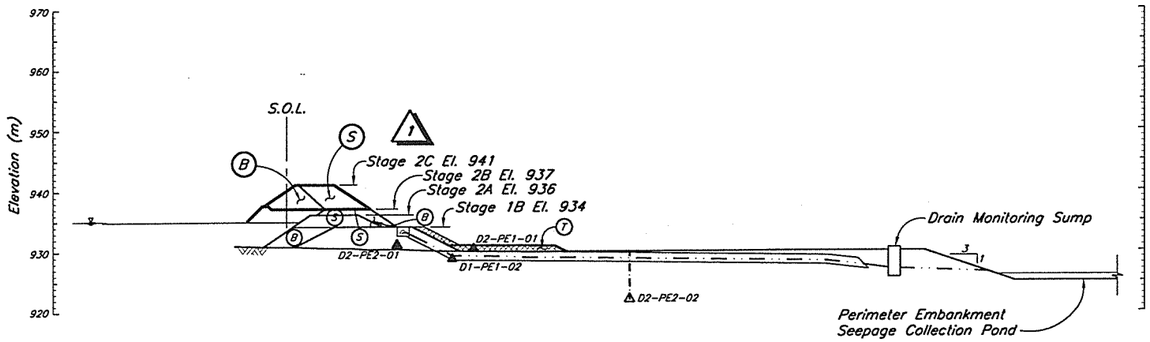

PLANE $\frac{D}{151}$
CH. 39+86

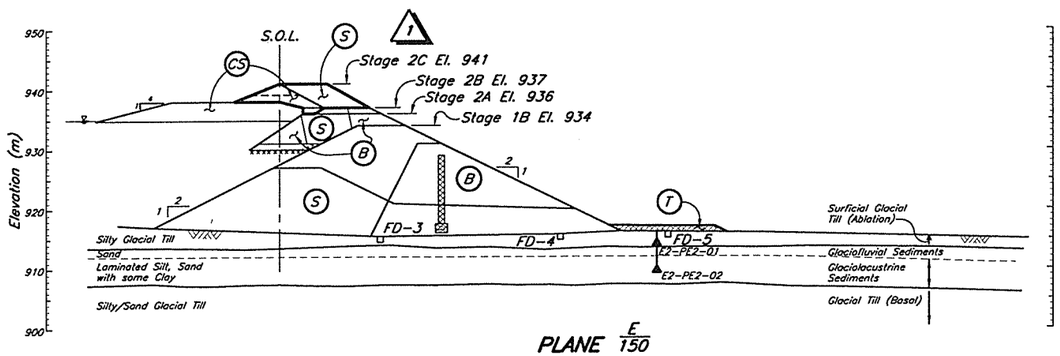

PLANE $\frac{E}{150}$
CH. 17+60

NOTES

1. Piezometers are vibrating wire type, SINCA Model 52611030 and RST Model 45005-0100 with a pressure rating of 100 psi or equivalent, connected to a readout panel via standard non-vented Model 50613524 direct burial cable.
2. Piezometer leads extended as directed by the Engineer.
3. See Drg. No. 11162-10-152 for Summary of Instrumentation Installations.

LEGEND

D0-PE1-01 — Plane I.D. (A, B etc.)
Area (0-Tailings, 1-Drain, 2-Embankment)
Number I.D.
Pressure Rating (1-Low, 2-High)
Type of Instrumentation (PE-Piezometer electric, SM-Survey Monument)

D1-PE1-01 ▲ Previously installed Piezometer

D2-PE2-02 △ New Stage 2C Piezometer

D2-SM-07 ◇ New Embankment Survey Monument

(B) Zone B

(C) Zone C

(S) Zone S

(T) Zone T

(CS) Cycloned Sand

Scale 10 0 10 20 30 40 50 m

VANCOUVER B.C. CAD FILE: M:\11162\10\ACAD\dwgs\021\021 1=500 Plot 1=0.5 17/08/00 bam

DRG. NO.	DESCRIPTION
152	TSF - STAGE 2C EXPANSION - INSTRUMENTATION SECTIONS - SHEET 1 OF 2
151	TSF - STAGE 2C EXPANSION - PERIMETER EMBANKMENT INSTRUMENTATION - PLAN
150	TSF - STAGE 2C EXPANSION - MAIN EMBANKMENT INSTRUMENTATION - PLAN

REFERENCE DRAWINGS

REV.	DATE	DESCRIPTION	DESIGN	DRAWN	CHK'D	APP'D

REVISIONS

REV.	DATE	DESCRIPTION	DESIGN	DRAWN	CHK'D	APP'D
1	14AUG'00	STAGE 2C AS BUILT	JRK	TAM		
0	31AUG99	ISSUED FOR CONSTRUCTION	JMTW	DSR	KJB	KJB

REVISIONS

PROFESSIONAL ENGINEER — PROVINCE OF BRITISH COLUMBIA — BROUWER

MOUNT POLLEY MINING CORPORATION

MOUNT POLLEY MINE

TAILINGS STORAGE FACILITY
STAGE 2C EXPANSION
INSTRUMENTATION SECTIONS
SHEET 2 OF 2

DESIGNED	CHECKED
JMTW	KJB
DRAWN	APPROVED
DSR	KJB

Knight Piésold CONSULTING

SCALE: AS SHOWN
REVISION: 1
DRAWING NO. 11162-10-153

XREF FILE :

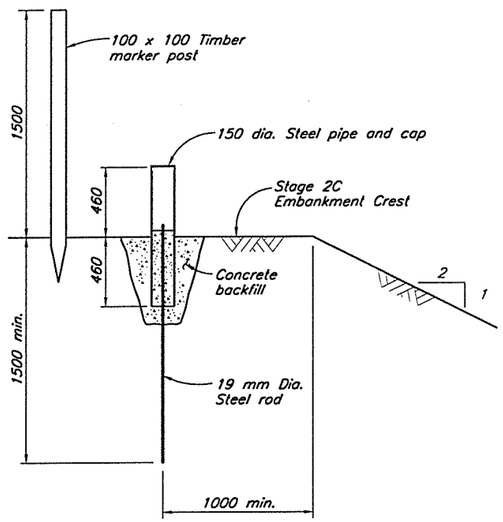

DETAIL OF
SURFACE MOVEMENT MONUMENT

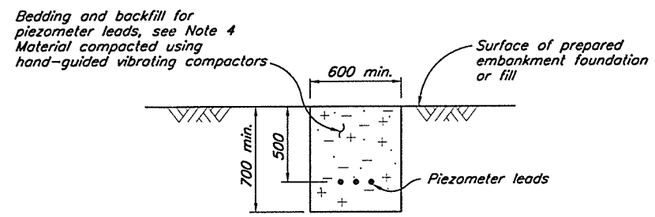

TYPICAL SECTION THROUGH PIEZOMETER LEAD TRENCH
IN PREPARED EMBANKMENT FOUNDATION OR FILL

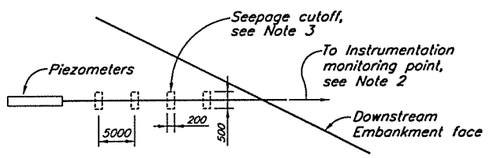

DETAIL $\frac{A}{152}$
TYPICAL DETAIL OF SEEPAGE CUTOFF FOR
PIEZOMETER LEADS IN GLACIAL TILL
NTS

NOTES

1. Dimensions are in millimeters unless otherwise noted.
2. Piezometer leads extended as directed by the Engineer.
3. Seepage cutoffs placed at 5 m intervals with 10% bentonite added to fine grained till backfill.
4. Fine grained till backfill must have all particles exceeding 25 mm removed.

Scale 1000 500 0 1000 2000 mm

VANCOUVER B.C. CAD FILE: M:\11162\10\ACAD\dwgs\022\022 1:20 Plot 1=0.02 17/08/00 tom

PROFESSIONAL ENGINEER — PROVINCE OF BRITISH COLUMBIA — K. J. BROUWER

MOUNT POLLEY MINING CORPORATION

MOUNT POLLEY MINE

TAILINGS STORAGE FACILITY
STAGE 2C EXPANSION INSTRUMENTATION
DETAILS

DRG. NO.	DESCRIPTION
152	TSF – STAGE 2C EXPANSION – INSTRUMENTATION SECTIONS – SHEET 1 OF 2

REFERENCE DRAWINGS

REV.	DATE	DESCRIPTION	DESIGN	DRAWN	CHK'D	APP'D

REVISIONS

REV.	DATE	DESCRIPTION	DESIGN	DRAWN	CHK'D	APP'D
1	14AUG'00	STAGE 2C AS BUILT	JDC	DSR	JMTW	KJB
0	31AUG99	ISSUED FOR CONSTRUCTION	JMTW	DSR	KJB	KJB

REVISIONS

DESIGNED	CHECKED
JMTW	KJB
DRAWN	APPROVED
DSR	KJB

Knight Piésold CONSULTING

SCALE: AS SHOWN
REVISION: 1
DRAWING NO. 11162-10-154

XREF FILE :

596 000 E
596 200 E
5 819 000 N
5 818 600 N
596 400 E
5 818 200 N
595 800 E
595 200 E
5 818 000 N

Topsoil stockpile

Future Borrow Area

Original Borrow Area

Booljack-Morehead Connector relocation

Instrumentation Monitoring Hut

Main Embankment Seepage Collection Pond

Overflow culverts, See Drg. No. 1625.211

Primary sediment control behind Main Embankment after commencement of fill placement

1/1625.214

Seepage recycle sump, see Detail A

Seepage recycle pipeline by Others

Drain Monitoring Sump

Basin Liner Limits, see Note 4

Reclaim barge channel

Wet or unsuitable material

2/1625.214

930
920
910
916
926
926

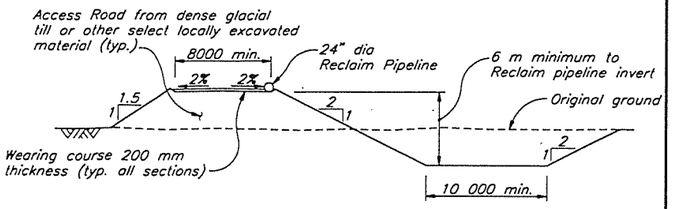

SECTION 3, SECTION 3/1625.218
RECLAIM BARGE CHANNEL
Scale B

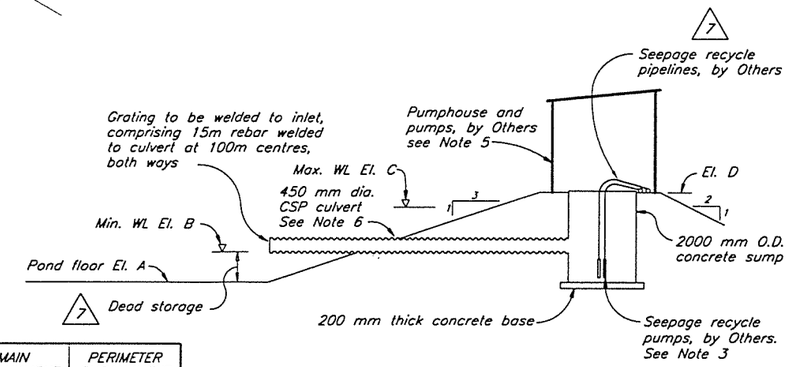

DETAIL A
SEEPAGE RECYCLE SYSTEM
NTS

ELEVATION	MAIN EMBANKMENT	PERIMETER EMBANKMENT
A	908.0	925.0
B	908.5	926.0
C	909.5	928.0
D	911.0	930.0

NOTE

1. Test pits indicate 4m thickness of till in proposed location of barge channel. Additional test pits will be required to confirm adequate thickness of till to finalize barge channel alignment.
2. Compacted glacial till shall be placed along the barge channel excavation if higher permeability sediments encountered (to meet basin liner requirements) as directed by the Engineer.
3. Seepage recycle pumps to be electric submersible pumps, discharging to pipelines extended up D/S face of tailings embankment. Pump sump to be fully enclosed with an insulated building c/w venting and I beam suitable for raising the pumps.
4. Extent of basin liner determined from exploration trenches.
5. Pumphouse by C.S.F.M. Engineering. Ltd. see Drg. No. 903
6. Penetration of concrete sump by CSP culvert to be water tight.
7. As built information provided by Mount Polley Mining Corporation.
8. Topography has not been updated for 1997 Flyover.

B 10 5 0 10 20 m
A 100 50 0 100 200 m

CAD FILE: \1625\022\022_1625D0 Plot 1-2.3 MAY 29, 1997

DRG. NO.	DESCRIPTION
1625.214	TSF – SEDIMENT CONTROL & SEEPAGE COLLECTION – SECTIONS & DETAILS
1625.211	TSF – TAILINGS EMBANKMENT – SECTIONS & DETAILS

REFERENCE DRAWINGS

REV.	DATE	DESCRIPTION	APPROVED
7	MAY 30/97	AS-BUILT EMBANKMENT, POND AND BARGE CHANNEL	KJB
6	MAY 24/96	ISSUED FOR CONSTRUCTION	

REVISIONS

REV.	DATE	DESCRIPTION	APPROVED
5	APR 26/96	CHANGE NOTE	
4	APR 19/96	RECLAIM CHANNEL ACCESS ROAD	
3	APR 1/96	CULVERTS & SEEPAGE DETAILS ADDED	
2	MAR 25/96	UPDATE ROAD & DRAINAGE	
1	JUL 27/95	BASIN LINER REVISED	
0	JUN 2/95	ISSUED FOR TENDER	

REVISIONS

KNIGHT PIESOLD LIMITED
CONSULTING ENGINEERS – VANCOUVER, B.C.

PROFESSIONAL ENGINEER – PROVINCE OF BRITISH COLUMBIA – K. D. KLEMPERER

DESIGNED	KDE
DRAWN	RDT/VY
CHECKED	KJB
APPROVED	KJB

MOUNT POLLEY MINING CORPORATION

MOUNT POLLEY PROJECT

TAILINGS STORAGE FACILITY
SEDIMENT CONTROL AND
SEEPAGE COLLECTION

DATE JUNE 2, 1995 | SCALE AS SHOWN | DRG. NO. 510-19-01-1625.213 | REV. 7

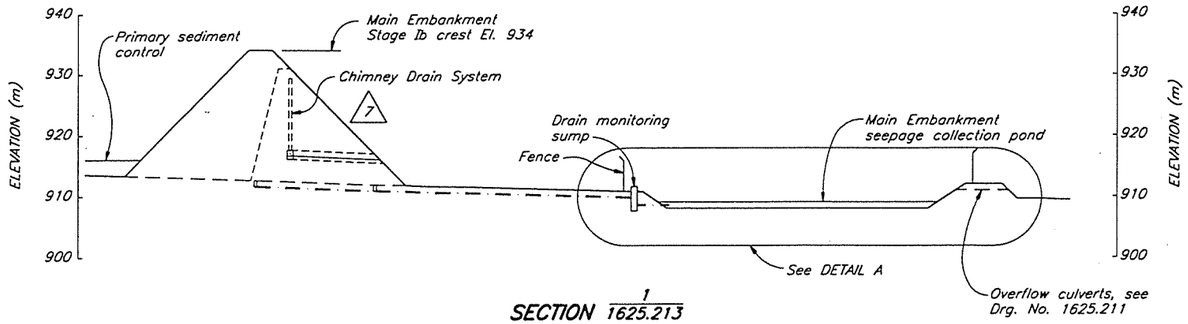

SECTION 1/1625.213
SEEPAGE PROFILE
Horiz. Scale C, Vert. Scale A

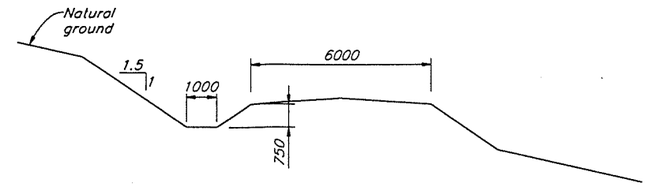

SECTION 2/1625.213
TYPICAL SECTION FOR BOOTJACK–MOREHEAD CONNECTOR RELOCATION
Scale B

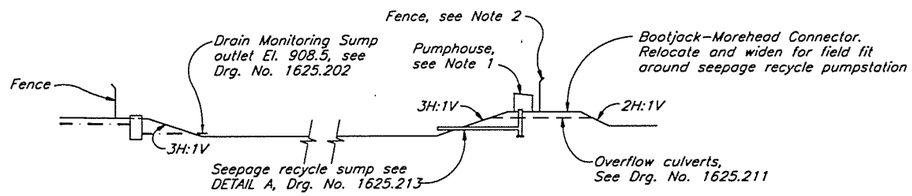

DETAIL A
MAIN EMBANKMENT SEEPAGE COLLECTION POND
Scale A

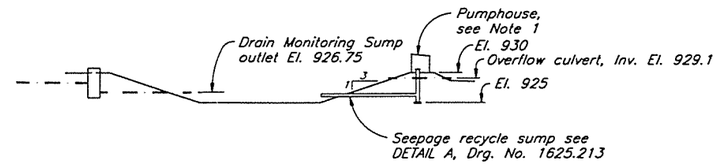

DETAIL E/1625.210
PERIMETER EMBANKMENT SEEPAGE COLLECTION POND
Scale A

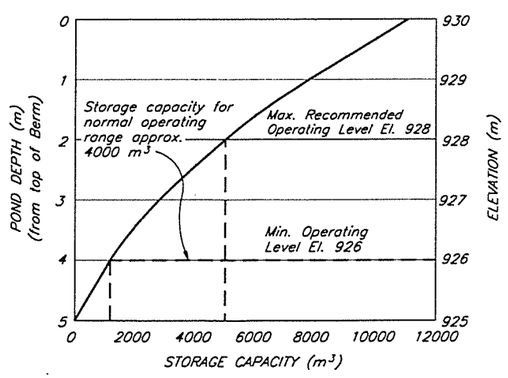

PERIMETER EMBANKMENT SEEPAGE COLLECTION POND
DEPTH/CAPACITY RELATIONSHIP

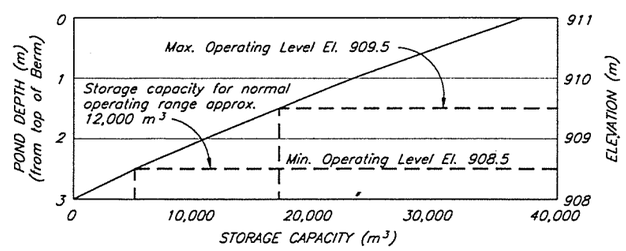

MAIN EMBANKMENT SEEPAGE COLLECTION POND
DEPTH/CAPACITY RELATIONSHIP

NOTES

1. Pumphouse by C.S.F.M. Engineering Ltd. see Drg. No. 903
2. (7) Fence to be six feet high, chain link with 2 inch galvanized posts and two six foot wide access gates. Not yet installed (May 27, 1997)
3. (7) As–built information provided by Mount Polley Mining Coporation.

C 20 10 0 20 40 60 80 100 m
B 2 1 0 2 4 6 8 10 m
A 10 5 0 10 20 30 40 50 m

CAD FILE: \1625\023\023 1:500 Plot 1=0.5 MAY 29, 1997

DRG. NO.	DESCRIPTION
1625.213	TSF – SEDIMENT CONTROL AND SEEPAGE COLLECTION
1625.211	TSF – TAILINGS EMBANKMENT – SECTIONS AND DETAILS
1625.210	TSF – MAIN AND PERIMETER EMBANKMENTS – PLAN
1625.202	TSF – FOUNDATION PREPARATION & BASIN LINER – SECTIONS & DETAILS

REFERENCE DRAWINGS

REV.	DATE	DESCRIPTION	APPROVED
7	MAY 30/97	AS–BUILT PONDS	KJB
6	JUN 6/96	FENCE NOTE ADDED	
5	MAY 24/96	RE–ISSUED FOR CONSTRUCTION	

REVISIONS

REV.	DATE	DESCRIPTION	APPROVED
4	APR 1/96	OVERFLOW CULVERTS ADDED	
3	MAR 22/96	UPDATE DRAINAGE AND ROAD	
2	SEPT. 5/95	ISSUED FOR CONSTRUCTION	
1	JULY 27/95	RIPRAP APRON ADDED	
0	JUNE 2/95	ISSUED FOR TENDER	

REVISIONS

KNIGHT PIESOLD LIMITED
CONSULTING ENGINEERS – VANCOUVER, B.C.

PROFESSIONAL ENGINEER – PROVINCE OF BRITISH COLUMBIA – K.D. KENNEDY

DESIGNED	KDE
DRAWN	VY/NSD
CHECKED	KJB
APPROVED	KJB

MOUNT POLLEY MINING CORPORATION

MOUNT POLLEY PROJECT

TAILINGS STORAGE FACILITY
SEDIMENT CONTROL AND SEEPAGE COLLECTION – SECTIONS AND DETAILS

DATE JUNE 2, 1995 | SCALE AS SHOWN | DRG. NO. 510–19–02–1625.214 | REV. 7

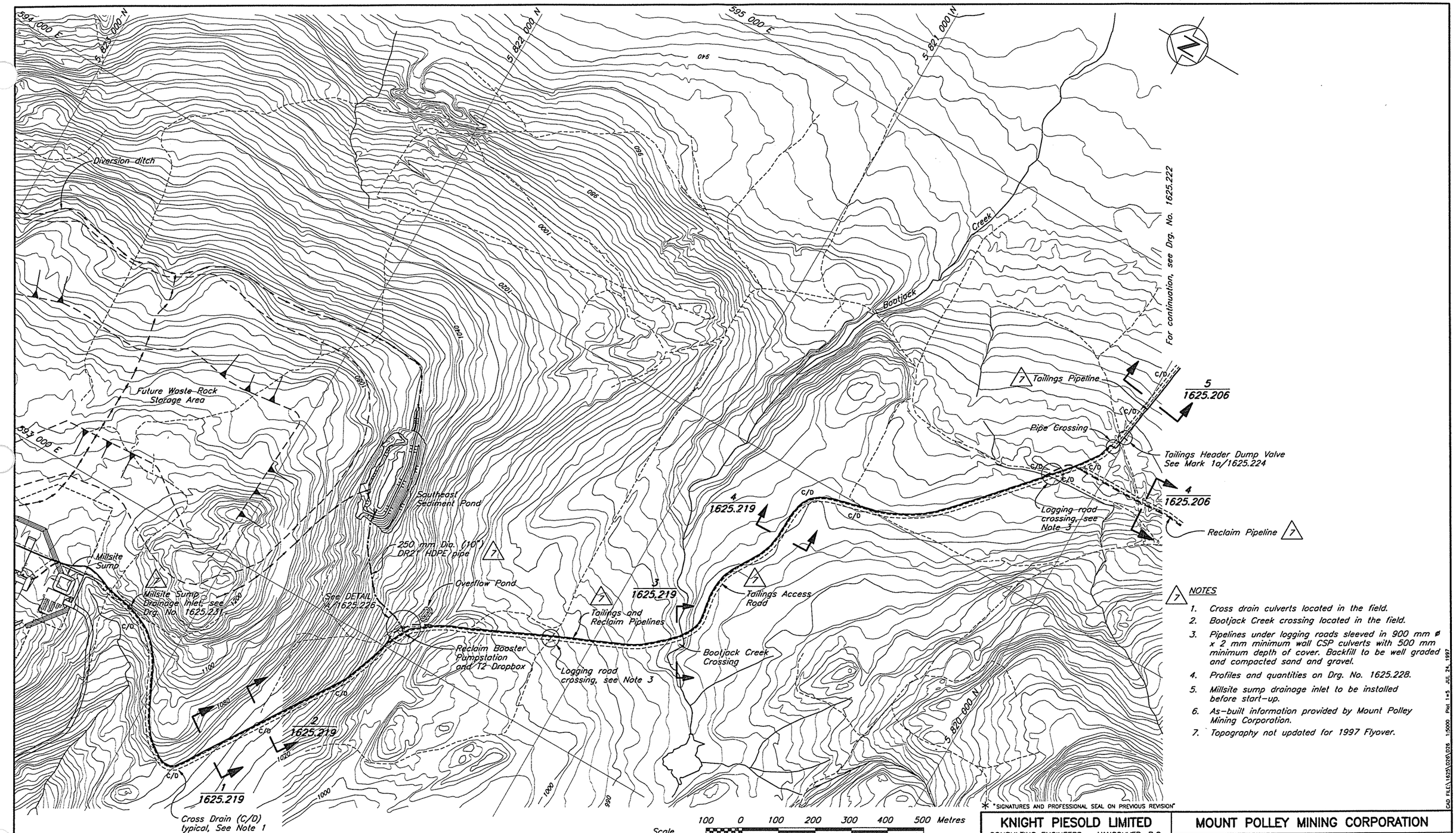

NOTES

1. Cross drain culverts located in the field.
2. Bootjack Creek crossing located in the field.
3. Pipelines under logging roads sleeved in 900 mm ø x 2 mm minimum wall CSP culverts with 500 mm minimum depth of cover. Backfill to be well graded and compacted sand and gravel.
4. Profiles and quantities on Drg. No. 1625.228.
5. Millsite sump drainage inlet to be installed before start-up.
6. As-built information provided by Mount Polley Mining Corporation.
7. Topography not updated for 1997 Flyover.

CAD FILE\ 1625\026\026 1:5000 Plot 1=5 JUL 24, 1997

"SIGNATURES AND PROFESSIONAL SEAL ON PREVIOUS REVISION"

DRG. NO.	DESCRIPTION
1625.231	DRAINAGE PLAN – MILL SITE
1625.228	TSF – TAILINGS DISTRIBUTION AND RECLAIM SYSTEM – PROFILES
1625.226	TSF – RECLAIM BOOSTER PUMP STATION AREA – GENERAL ARRANGEMENT
1625.222	TSF – TAILINGS IMPOUNDMENT – TAILINGS AND RECLAIM PIPEWORK PLAN
1625.219	TSF – TAILINGS DISTRIBUTION & RECLAIM SYSTEM – SECTIONS & DETAILS
1625.206	TSF – RECLAIM BARGE CHANNEL – EXCAVATION DETAILS

REFERENCE DRAWINGS

REV.	DATE	DESCRIPTION	APPROVED
7	JUL 25/97	AS-BUILT PIPELINES	KB
6	MAY 30/97	AS-BUILT SOUTHEAST SEDIMENT POND	

REVISIONS

REV.	DATE	DESCRIPTION	APPROVED
5	JULY 15/96	PIPELINES RELOCATED, SEE NOTE 5	
4	MAY 24/96	ISSUED FOR CONSTRUCTION	
3	APR 19/95	NOTE ADDED	
2	APR 1/96	MILLSITE AND CONTROL POND REVISED	
1	MAR 25/96	RE-ISSUED FOR TENDER	
0	JUNE 2/95	ISSUED FOR TENDER	

REVISIONS

KNIGHT PIESOLD LIMITED
CONSULTING ENGINEERS – VANCOUVER, B.C.

*

DESIGNED	MBS
DRAWN	VY/RDT/NSD
CHECKED	*
APPROVED	*

MOUNT POLLEY MINING CORPORATION

MOUNT POLLEY PROJECT

TAILINGS STORAGE FACILITY
TAILINGS DISTRIBUTION AND
RECLAIM SYSTEM – PLAN

DATE	SCALE	DRG. NO.	REV.
JUNE 2, 1995	AS SHOWN	1625.218	7

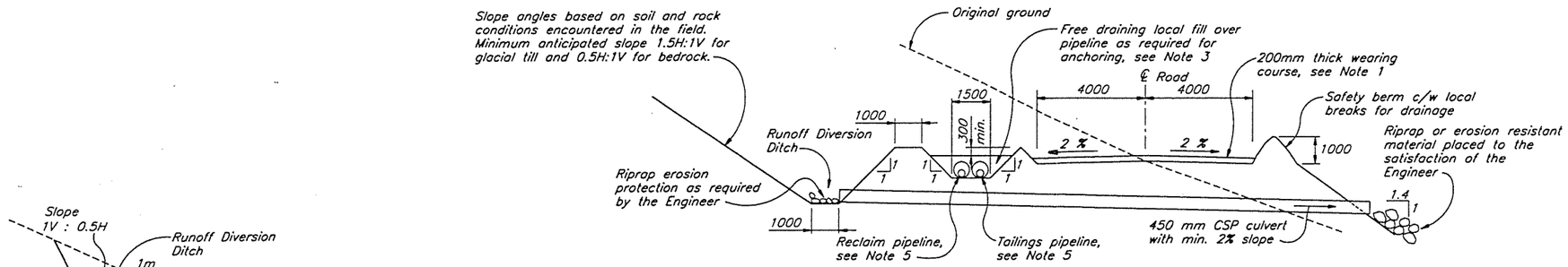

SECTION 2/1625.218

DIVERSION DITCH AND CROSS-DRAIN CULVERT FOR TAILINGS ACCESS ROAD

Scale B

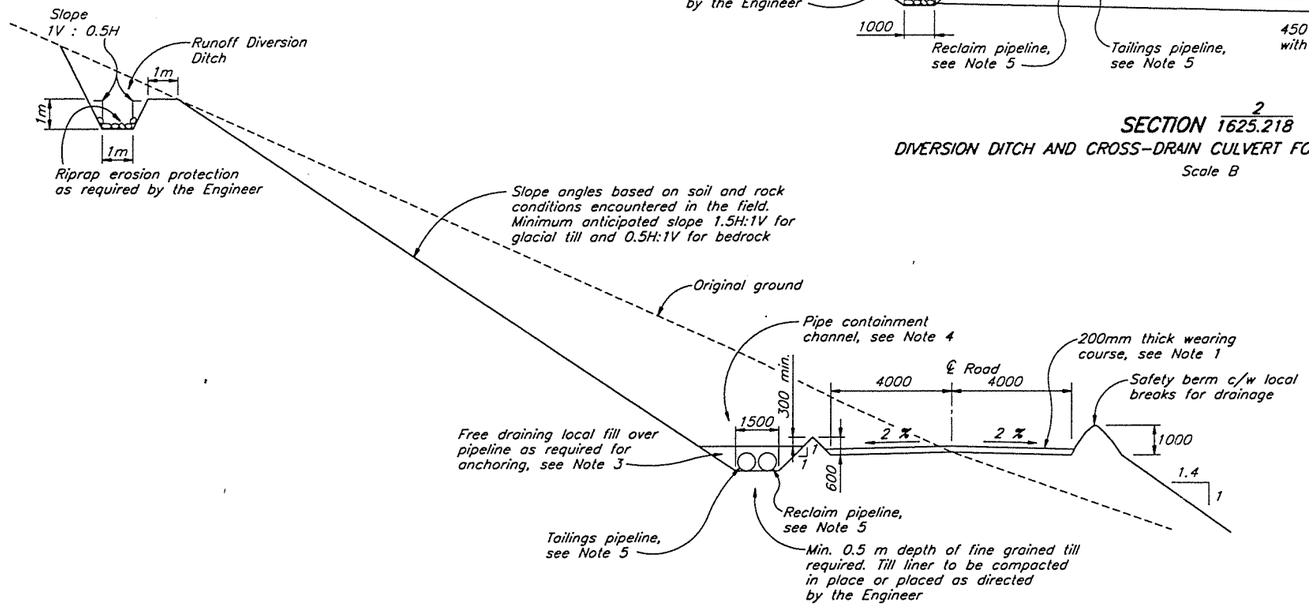

SECTION 1/1625.218 , 1/1625.226

TAILINGS ACCESS ROAD WITH DIVERSION DITCH

Scale B

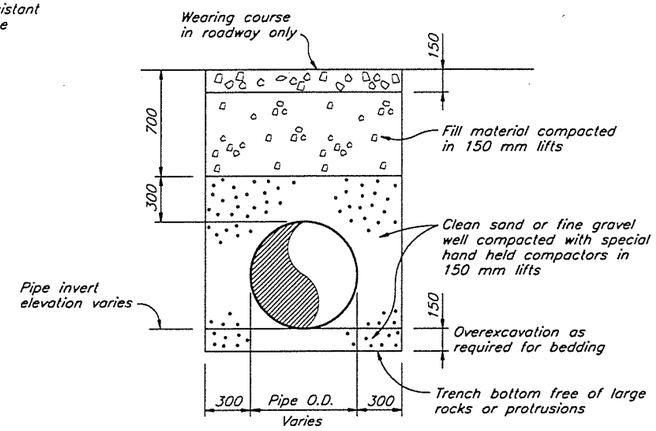

TYPICAL DETAIL FOR BURIED HDPE PIPE

NTS

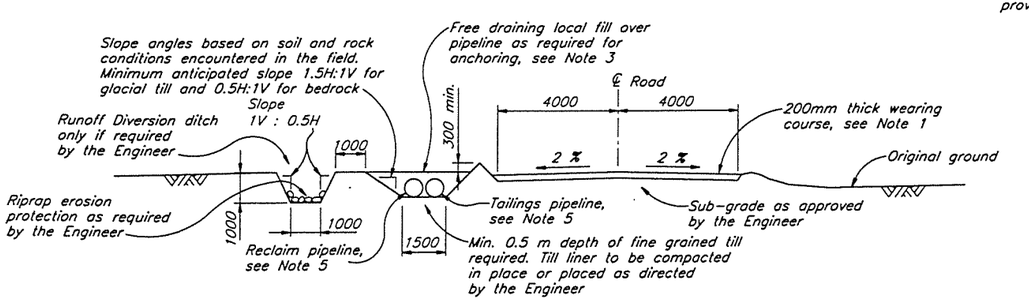

SECTION 4/1625.218 , 2/1625.226

TAILINGS ACCESS ROAD WITH DIVERSION DITCH ON FLAT GROUND

Scale B

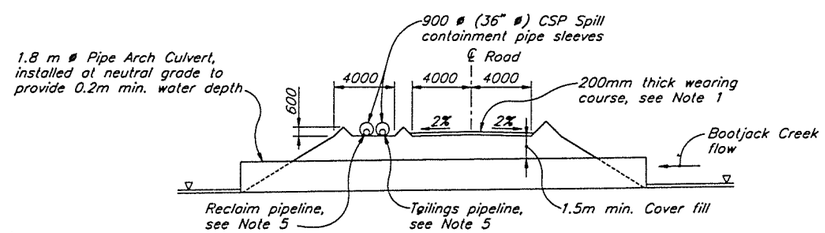

SECTION 3/1625.218

TAILINGS ACCESS ROAD BOOTJACK CREEK CROSSING

Scale A

NOTES

1. Wearing course required for Tailings Access Road, Reclaim Barge Access Road and Bootjack–Morehead connector relocation only.
2. For crossing under road, tailings and reclaim pipelines to be installed in individual 900 mm (min.) dia. culverts laid under road with 500 mm min. cover. Culverts laid immediately downslope of cross–drain.
3. Spacing of fill for anchoring to be determined in the field by the Engineer. Anchor posts or concrete anchor blocks can be substituted for local fill.
4. Trench width may vary locally to accomodate additional pipelines or structures in the trench.
5. Tailings and reclaim pipelines crossed over immediately up–gradient of T2 Dropbox and where the pipelines split at the Tailings Storage Facility.
6. Runoff Diversion Ditches may require periodic cleaning.
7. (7) Tailings access road design was modified by Mount Polley Mining Corporation. Road cross–section may vary from that shown.

B: 2 1 0 2 4 6 8 10 m

A: 10 5 0 10 20 m

CAD FILE\1625\027\027 1:200 Plot 1=0.2 MAY 29, 1997

DRG. NO.	DESCRIPTION
1625.226	TSF – RECLAIM BOOSTER PUMP STATION AREA – GENERAL ARRANGEMENT
1625.218	TSF – TAILINGS DISTRIBUTION & RECLAIM SYSTEM – PLAN

REFERENCE DRAWINGS

REV.	DATE	DESCRIPTION	APPROVED
7	MAY 30/97	NOTES UPDATED	KJB
6	APR. 29/97	TAILINGS ACCESS ROAD WAS NOT BUILT TO THIS DESIGN	

REVISIONS

REV.	DATE	DESCRIPTION	APPROVED
5	JULY 15/96	PIPELINES RELOCATED	
4	MAY 28/96	ISSUED FOR CONSTRUCTION	
3	APR 26/96	REVISE DRAINAGE DITCHES	
2	APR 19/96	SECTIONS REVISED	
1	MAR 22/96	RE–ISSUED FOR TENDER	
0	JUNE 2/95	ISSUED FOR TENDER	

REVISIONS

KNIGHT PIESOLD LIMITED
CONSULTING ENGINEERS – VANCOUVER, B.C.

PROFESSIONAL ENGINEER – PROVINCE OF BRITISH COLUMBIA – K. D. K. LUMBRE

DESIGNED	MBS/HPD
DRAWN	VY
CHECKED	KJB
APPROVED	KJB

DATE JUNE 2, 1995 | SCALE AS SHOWN | DRG. NO. 510–61–02–1625.219 | REV. 7

MOUNT POLLEY MINING CORPORATION

MOUNT POLLEY PROJECT

TAILINGS STORAGE FACILITY
TAILINGS DISTRIBUTION AND
RECLAIM SYSTEM – SECTIONS AND DETAILS

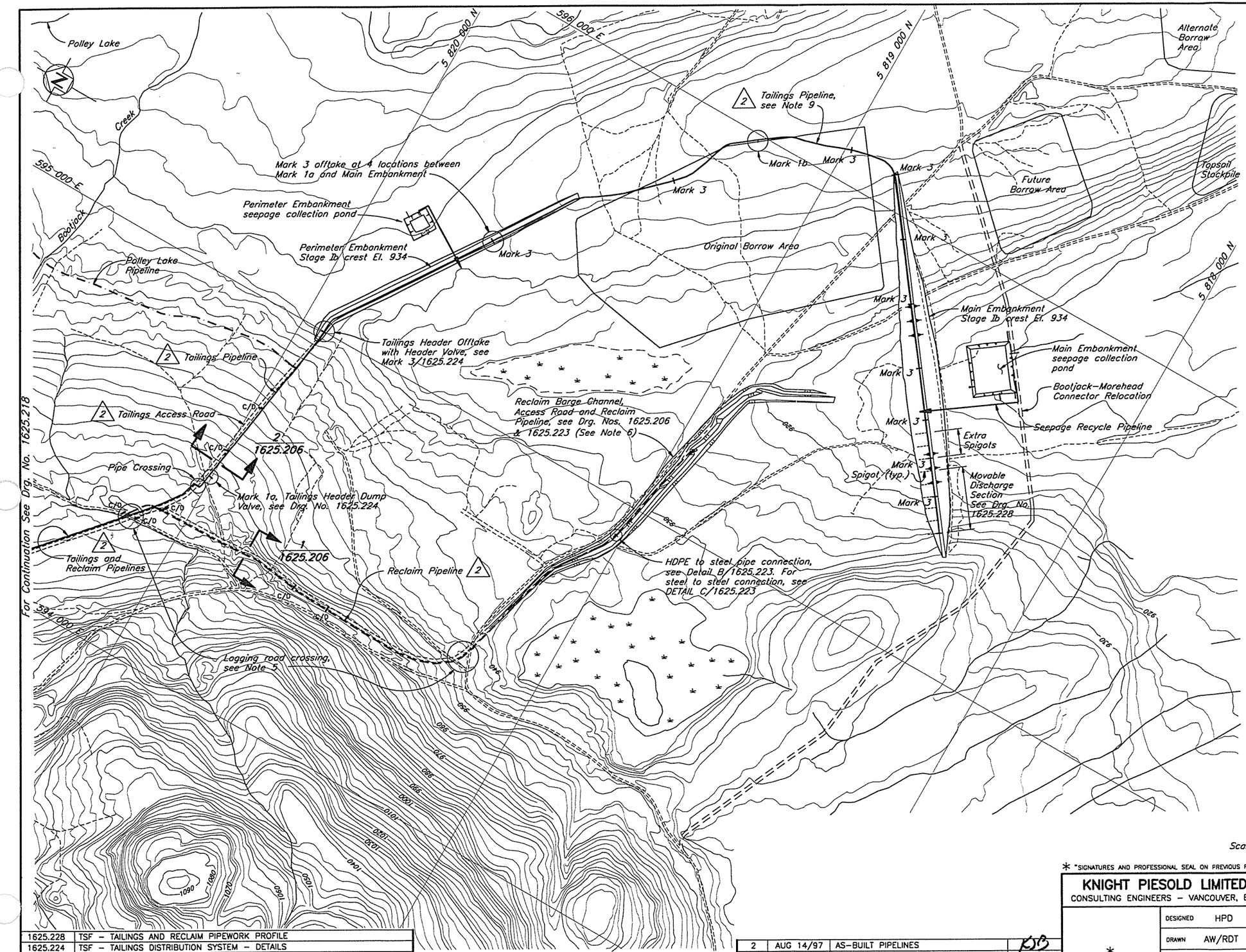

NOTES

1. Tailings and reclaim pipeline profiles shown on Drg. No. 1625.228.
2. Mark 3 offtakes temporarily omitted, (flange locations shown). Pipe sections have flanged joints to permit Mark 3 offtakes to be installed as required.
3. Mark 2 and 4 offtakes have been revised and are included on the movable discharge section, as shown on Drg. No. 1625.224.
4. All bends in tailings and reclaim HDPE pipelines are made using natural flexibility of pipe unless otherwise noted. Minimum bend radius to be 25 pipe diameter.
5. Pipelines at logging road crossings to be sleeved in 900 mm ø x 2mm minimum wall CSP culvert with 500 mm minimum depth of cover. Backfill to be well graded and compacted sand and gravel.
6. Reclaim pipeline installed to original ground at El. 925 m. Additional ramps for barge to be added as required.
7. As-built information provided by Mount Polley Mining Corporation.
8. Topography has not been updated for 1997 Flyover.
9. Tailings pipeline installed on grade between Perimeter and Main Embankments. Access is provided by a rough trail near the pipeline.

DRG. NO.	DESCRIPTION
1625.228	TSF – TAILINGS AND RECLAIM PIPEWORK PROFILE
1625.224	TSF – TAILINGS DISTRIBUTION SYSTEM – DETAILS
1625.223	RECLAIM PIPELINE DETAILS
1625.218	TAILINGS DISTRIBUTION AND RECLAIM SYSTEM – PLAN
1625.206	TSF – RECLAIM BARGE CHANNEL – EXCAVATION DETAILS

REFERENCE DRAWINGS

REV.	DATE	DESCRIPTION	APPROVED

REVISIONS

REV.	DATE	DESCRIPTION	APPROVED
2	AUG 14/97	AS-BUILT PIPELINES	KJB
1	MAY 30/97	AS-BUILT BARGE CHANNEL, EMBANKMENTS, AND PONDS	
0	JULY 15/96	ISSUED FOR CONSTRUCTION	

REVISIONS

* "SIGNATURES AND PROFESSIONAL SEAL ON PREVIOUS REVISION"

KNIGHT PIESOLD LIMITED
CONSULTING ENGINEERS – VANCOUVER, B.C.

*

DESIGNED HPD
DRAWN AW/RDT
CHECKED *
APPROVED *

MOUNT POLLEY MINING CORPORATION

MOUNT POLLEY PROJECT

TAILINGS STORAGE FACILITY
TAILINGS IMPOUNDMENT
TAILINGS AND RECLAIM PIPEWORK PLAN

DATE JULY 15, 1996 | SCALE AS SHOWN | DRG. NO. 1625.222 | REV. 2

CAD FILE:\1625\DWG\042 1:5000 Plot 1=5 AUG 14, 1997

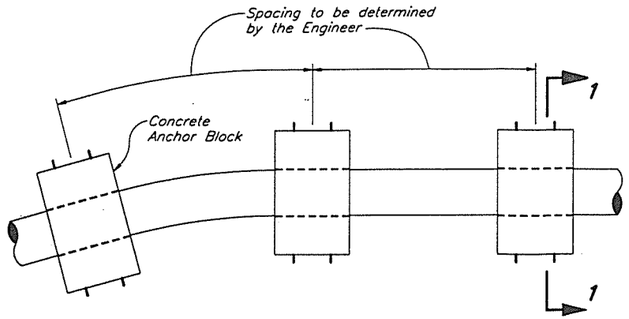

PIPELINE BEND ANCHORING
Scale B

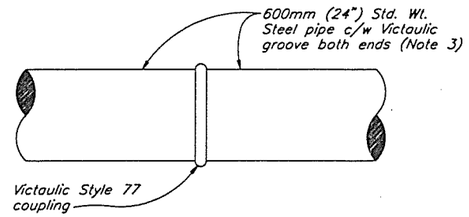

DETAIL C/1625.222
STEEL RECLAIM PIPE CONNECTION
Scale A

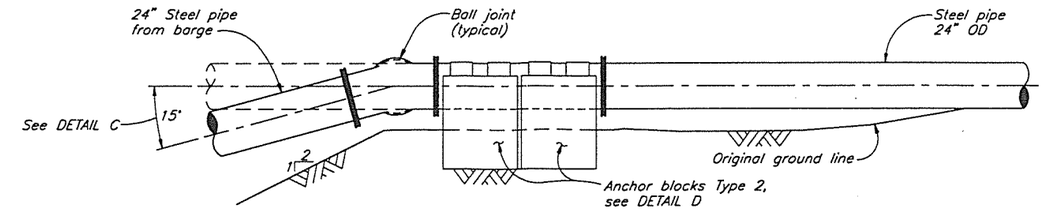

DETAIL A, A/1625.206
ONSHORE BALL JOINT
Scale B

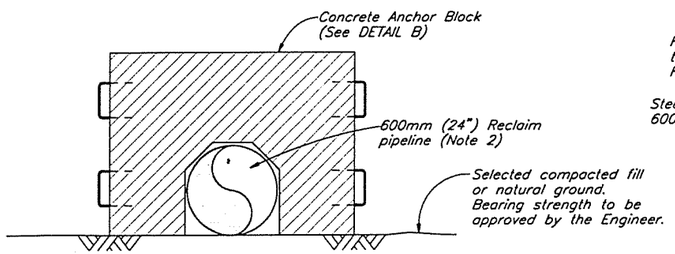

SECTION 1
CONCRETE ANCHOR BLOCK – TYPE 1 APPLICATION
Scale A

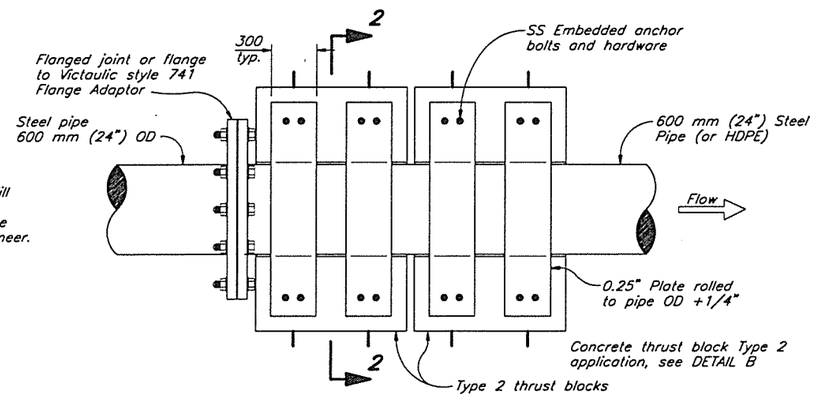

DETAIL D, B/1625.222
CONCRETE THRUST BLOCK – TYPE 2 APPLICATION
CONNECTION BETWEEN STEEL AND HDPE PIPE
CONNECTION AT RECLAIM BOOSTER PUMPSTATION DISCHARGE
AND CONNECTION AT BARGE OFFTAKE BALL JOINT
Scale A

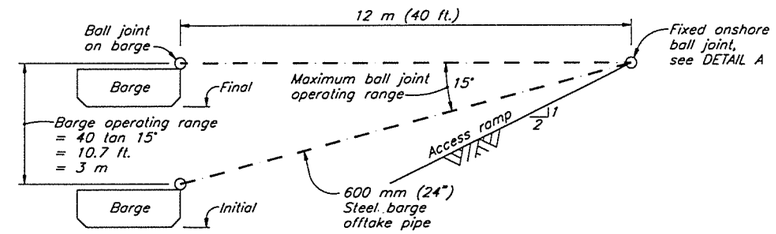

DETAIL C
BARGE OPERATING RANGE – SCHEMATIC

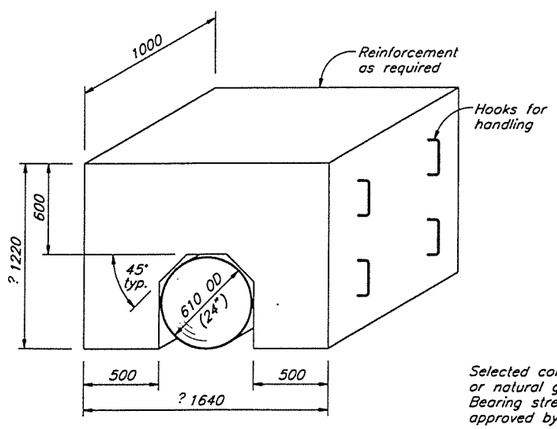

DETAIL B
TYPICAL PORTABLE CONCRETE BLOCK FOR 24" OD PIPE
(4.5 TONNE)
Scale A

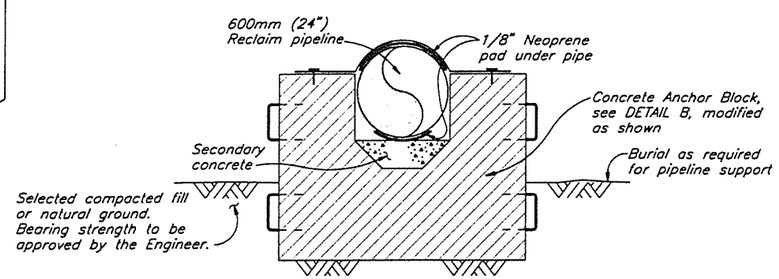

SECTION 2
CONCRETE THRUST BLOCK – TYPE 2 APPLICATION
Scale A

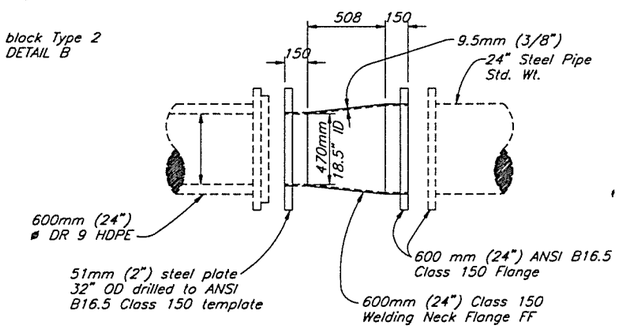

DETAIL
REDUCER, SPECIAL, 24" HDPE TO STEEL
INSIDE DIAMETER ADAPTER
Scale A

NOTES

1. Concrete anchoring blocks to be used at barge ball joint and at locations where pipeline changes from steel to HDPE.
2. Anchor blocks may be used for reclaim or tailings pipeline as required by the Engineer. Modifications will be required for pipe diameter other than 24".
3. Victaulic grooves to be rolled if pipe wall thickness is less than 0.375".

B 2000 1000 0 2000 4000 mm
A 1000 500 0 1000 2000 mm

CAD FILE\1625\040\040 1:20 Plot 1=0.02 MAY 29, 1997

DRG. NO.	DESCRIPTION
1625.224	TAILINGS DISTRIBUTION SYSTEM – DETAILS
1625.222	TAILINGS IMPOUNDMENT – TAILINGS AND RECLAIM PIPEWORK PLAN
1625.206	TSF – RECLAIM BARGE CHANNEL – EXCAVATION DETAILS

REFERENCE DRAWINGS

REV.	DATE	DESCRIPTION	APPROVED

REVISIONS

REV.	DATE	DESCRIPTION	APPROVED
1	MAY 30/97	REFERENCE TO DRAWINGS REVISED	KJB
0	JULY 15/96	ISSUED FOR CONSTRUCTION	

REVISIONS

KNIGHT PIESOLD LIMITED
CONSULTING ENGINEERS – VANCOUVER, B.C.

PROFESSIONAL ENGINEER – PROVINCE OF BRITISH COLUMBIA – R. P. DERV

DESIGNED	HPD/NM
DRAWN	AW/RDT/NSD
CHECKED	KDE
APPROVED	KJB

MOUNT POLLEY MINING CORPORATION

MOUNT POLLEY PROJECT

TAILINGS STORAGE FACILITY
RECLAIM PIPELINE DETAILS

DATE JULY 15, 1996 | SCALE AS SHOWN | DRG. NO. 1625.223 | REV. 1

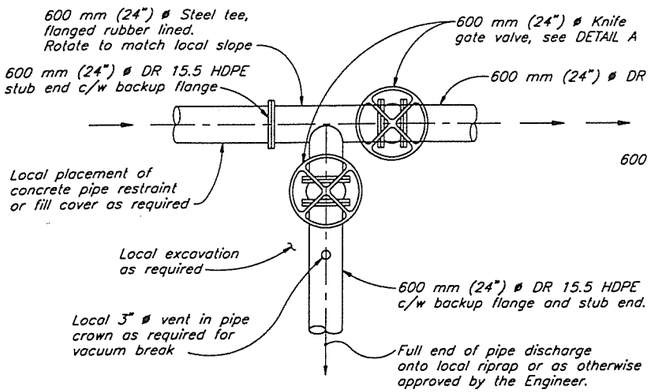

TAILINGS HEADER DUMP VALVE (MARK 1/1625.222)

Scale A

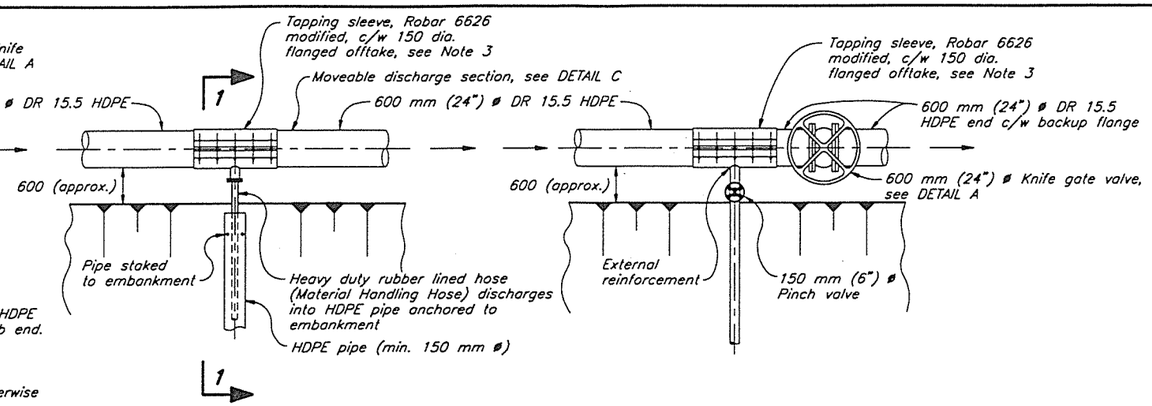

TYP. TAILINGS HEADER OFFTAKE (MARK 2/1625.222)

Scale A

TYP. TAILINGS HEADER OFFTAKE WITH HEADER VALVE (MARK 3/1625.222)

Scale A

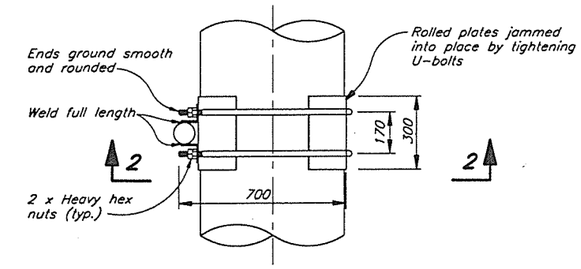

PIPE RESTRAINT FOR 24" HDPE

(Locate as required by the Engineer)

NTS

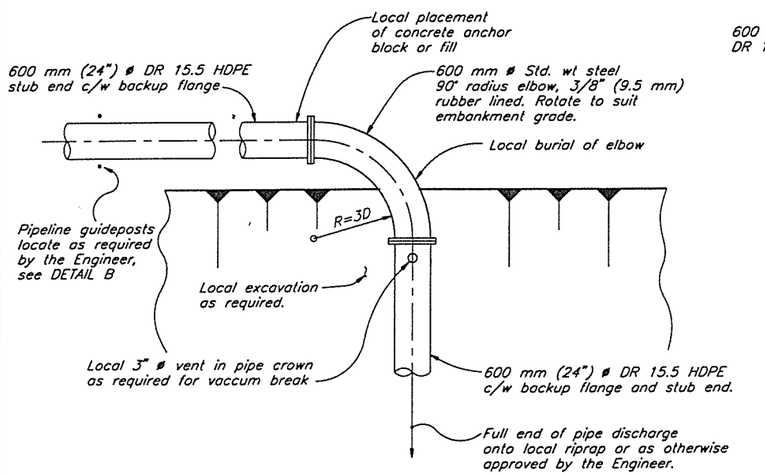

ALTERNATE TAILINGS HEADER PIPELINE TERMINATION (MARK 4/1625.222)

Scale A

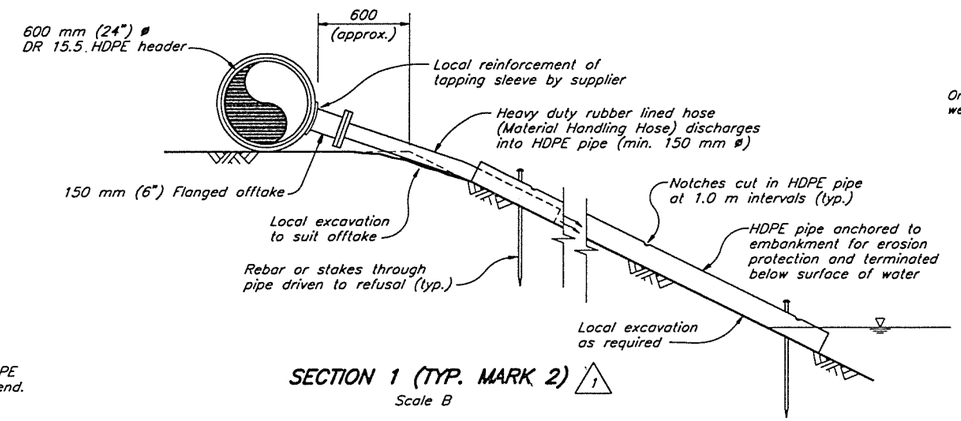

SECTION 1 (TYP. MARK 2) 1

Scale B

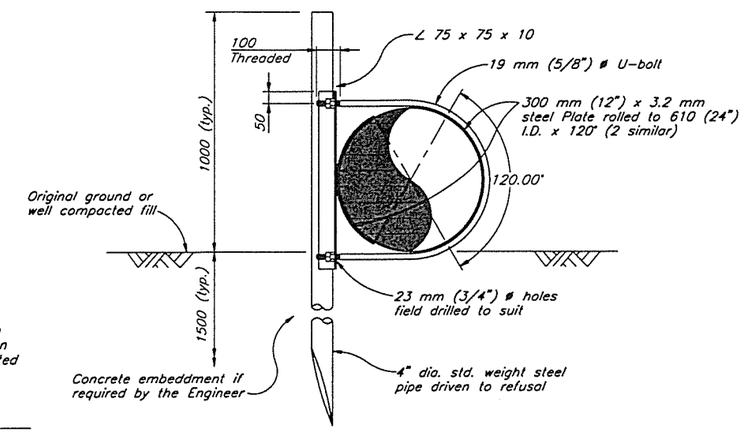

SECTION 2

NTS

NOTES

1. Rubber lining to be Linatex PGR or approved equivalent.
2. Pipe restraint by local burial of pipeline or as otherwise required by the Engineer to control movement due to thermal and hydraulic forces.
3. Robar 6626 c/w 1/4" rubber lining of offtake and external reinforcement of offtake to sleeve joint.
4. HDPE Pipe ID exceeds that of knife gate valve and is to be field bevelled to match.
5. HDPE pipelines to be connected under cool conditions with snaking allowance made for additional thermal contraction of empty pipeline.
6. Mark 2 and 3 offtakes to be added as required.

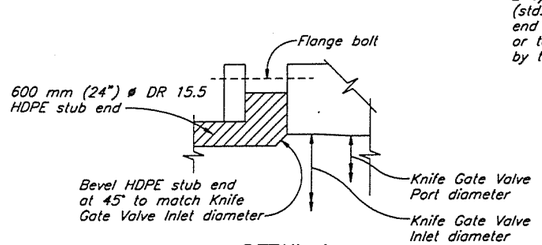

DETAIL A

KNIFE GATE INLET

(Note 4)

NTS

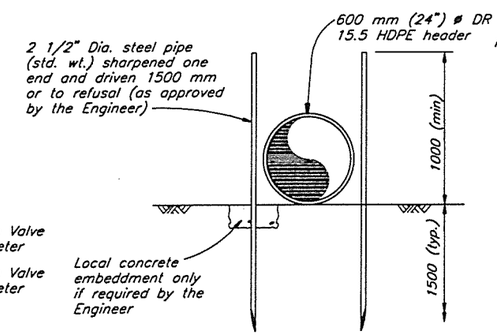

DETAIL B

GUIDEPOST

Scale B

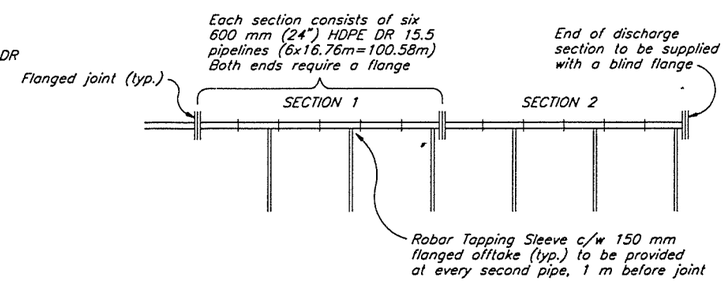

DETAIL C

1 SCHEMATIC PLAN OF MOVABLE DISCHARGE SECTION

NTS

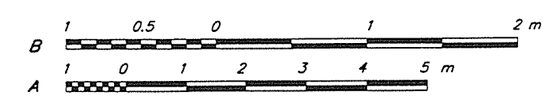

CAD FILE\1625\039\039 1:50 Plot 1=0.05 MAY 29, 1997

DRG. NO.	DESCRIPTION
1625.222	TSF – TAILINGS AND RECLAIM PIPEWORK PLAN
1625.228	TSF – TAILINGS AND RECLAIM PIPEWORK PROFILES

REFERENCE DRAWINGS

REV.	DATE	DESCRIPTION	APPROVED

REVISIONS

REV.	DATE	DESCRIPTION	APPROVED
1	MAY 30/97	REVISED DISCHARGE SECTION	KJB
0	JULY 15/96	ISSUED FOR CONSTRUCTION	

REVISIONS

KNIGHT PIESOLD LIMITED
CONSULTING ENGINEERS – VANCOUVER, B.C.

PROFESSIONAL ENGINEER – PROVINCE OF BRITISH COLUMBIA – K. P. DEW

DESIGNED	HPD
DRAWN	AW/RDT
CHECKED	KDE
APPROVED	KJB

MOUNT POLLEY MINING CORPORATION

MOUNT POLLEY PROJECT

TAILINGS STORAGE FACILITY
TAILINGS DISTRIBUTION SYSTEM
DETAILS

DATE JULY 15, 1996 | SCALE AS SHOWN | DRG. NO. 1625.224 | REV. 1

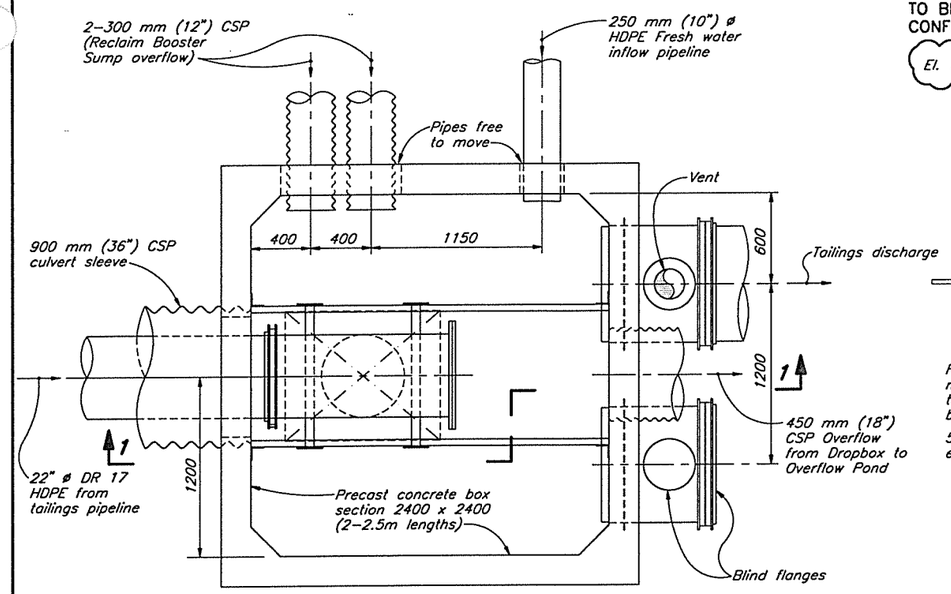

T2 TAILINGS DROPBOX
Scale A

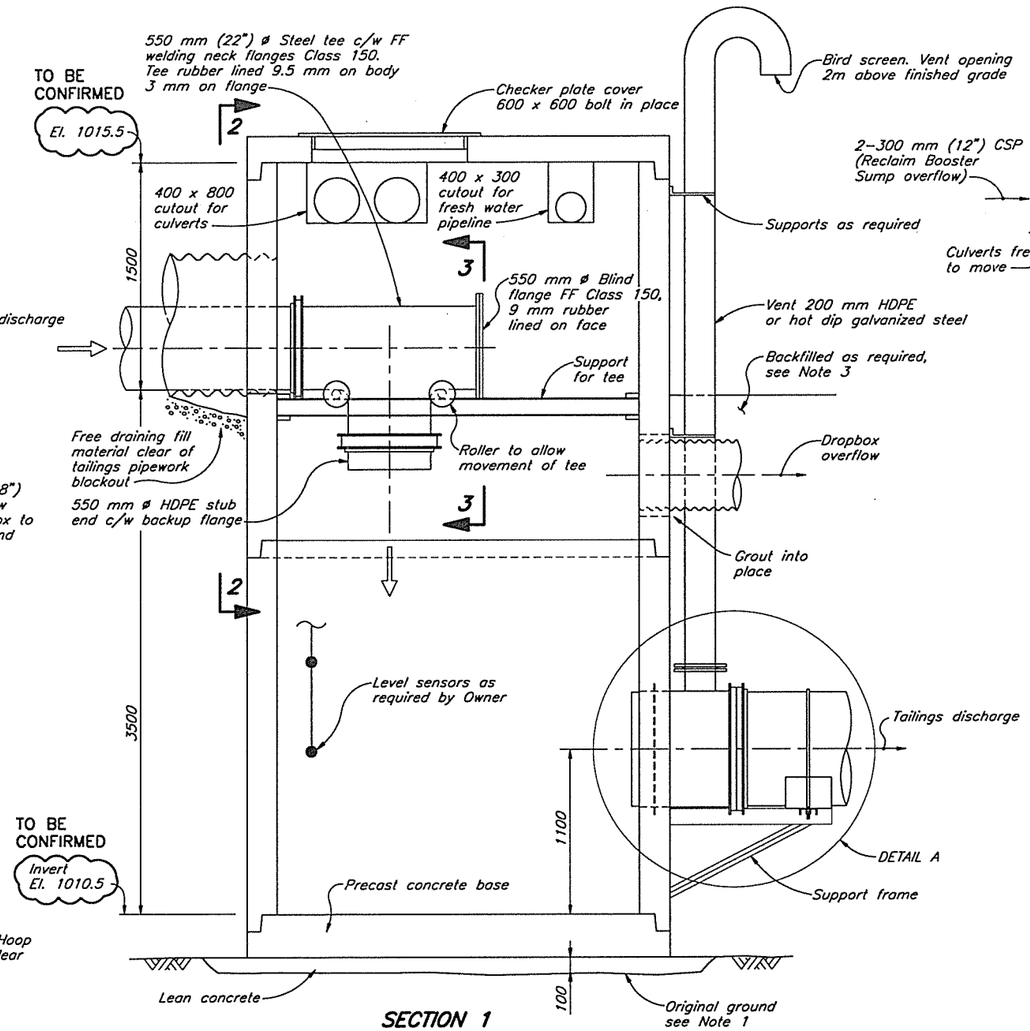

SECTION 1
Scale A

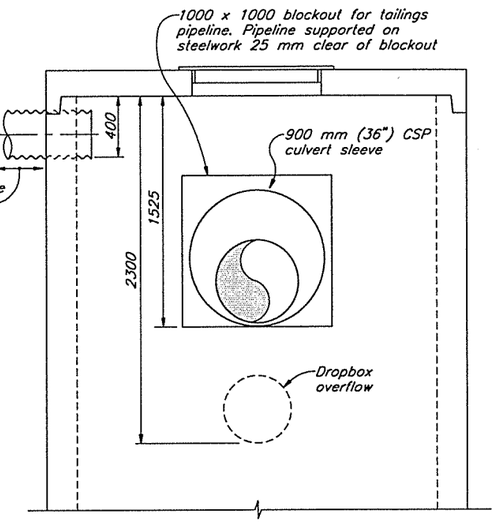

SECTION 2
Scale A

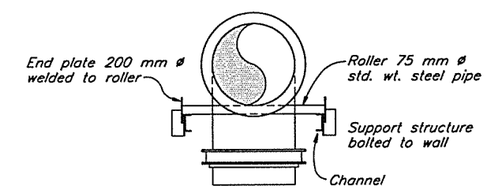

SECTION 3
Scale A

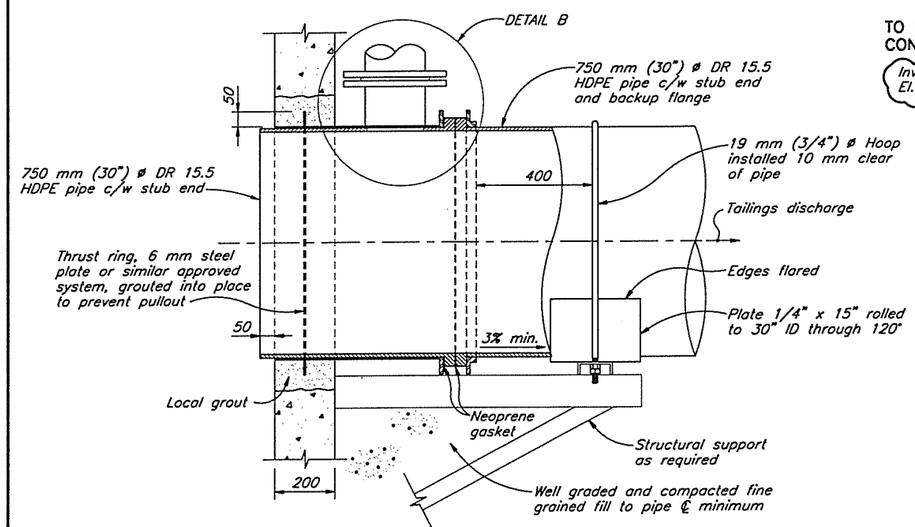

DETAIL A
DISCHARGE PIPELINE
Scale B

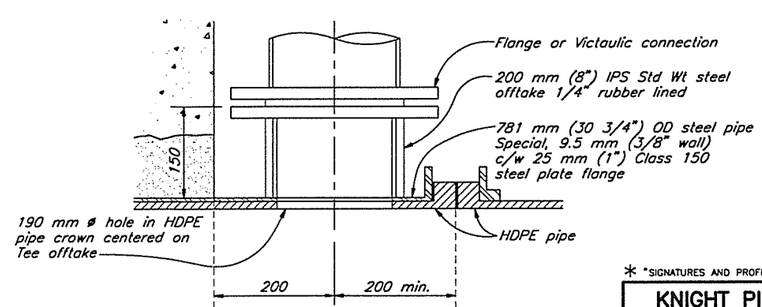

DETAIL B
VENT CONNECTION
Scale C

NOTES

1. Foundation bearing capacity to be 100 kPa min..
2. Structural steel bolting to be stainless steel.
3. Backfill around dropbox to be placed and compacted in max. 500 mm lifts.
4. Elevations to be updated based on as-built survey.

C	250	125	0	250	500 mm
B	500	250	0	500	1000 mm
A	1000	500	0	1000	2000 mm

CAD FILE\1625\D41\D41 1:20 Plot 1=0.02 AUG 14, 1997

* "SIGNATURES AND PROFESSIONAL SEAL ON PREVIOUS REVISION"

DRG. NO.	DESCRIPTION
1625.228	TSF – TAILINGS AND RECLAIM PIPEWORK PROFILES
1625.226	TSF – RECLAIM BOOSTER PUMP STATION, AREA – GENERAL ARRANGEMENT

REFERENCE DRAWINGS

REV.	DATE	DESCRIPTION	APPROVED

REVISIONS

REV.	DATE	DESCRIPTION	APPROVED
2	AUG 14/97	AS-BUILT DETAILS	KJB
1	MAY 30/97	REVISED DROPBOX	
0	JULY 15/96	ISSUED FOR CONSTRUCTION	

REVISIONS

KNIGHT PIESOLD LIMITED
CONSULTING ENGINEERS – VANCOUVER, B.C.

DESIGNED	HPD
DRAWN	TAM/NSD
CHECKED	*
APPROVED	*

MOUNT POLLEY MINING CORPORATION

MOUNT POLLEY PROJECT

TAILINGS STORAGE FACILITY
TAILINGS PIPEWORK DETAILS
DROP BOX No. 2

DATE	SCALE	DRG. NO.	REV.
JULY 15, 1996	AS SHOWN	1625.225	2

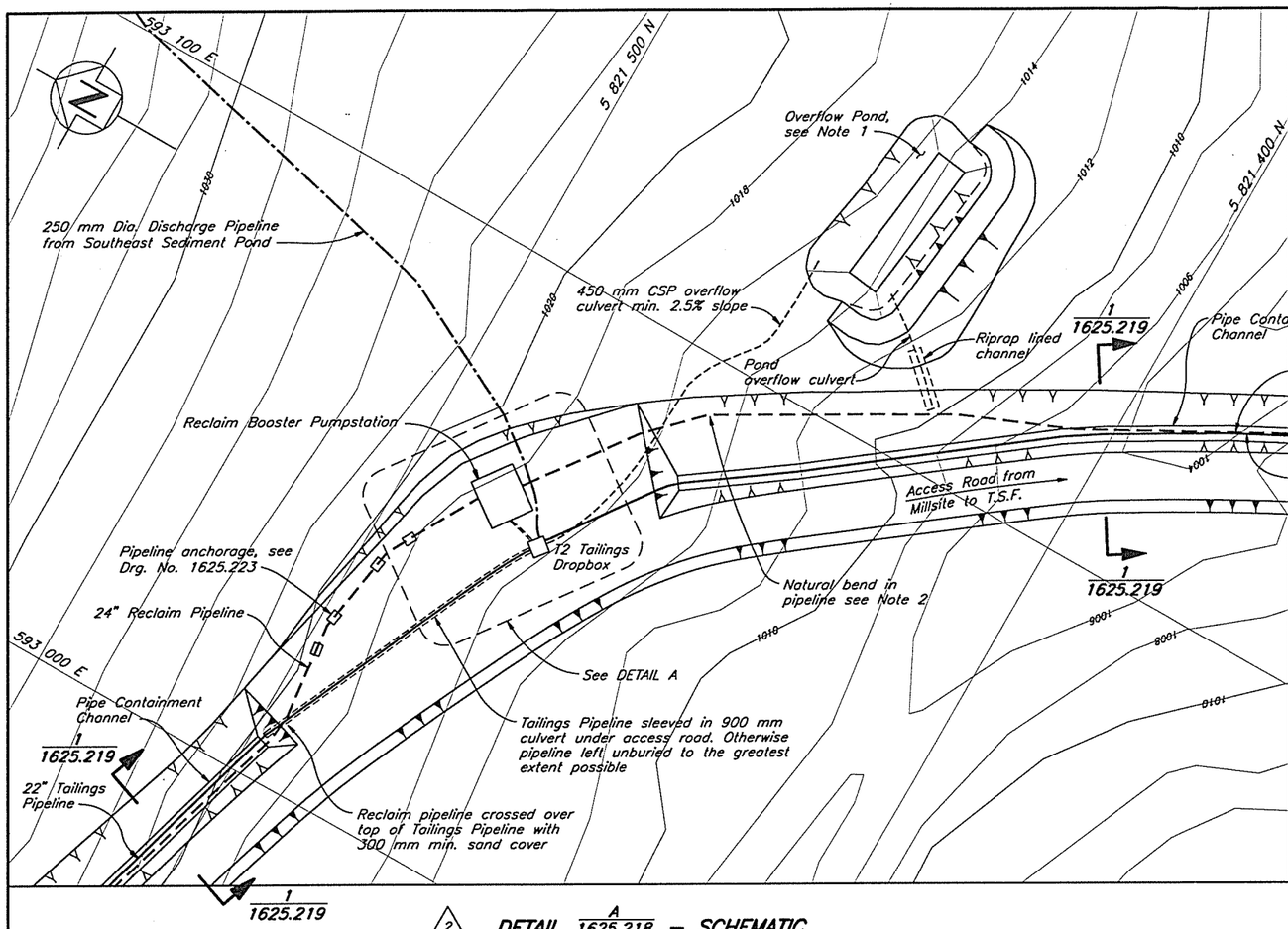

2 DETAIL A/1625.218 – SCHEMATIC

RECLAIM BOOSTER PUMPSTATION, T2 TALINGS DROPBOX AND OVERFLOW POND

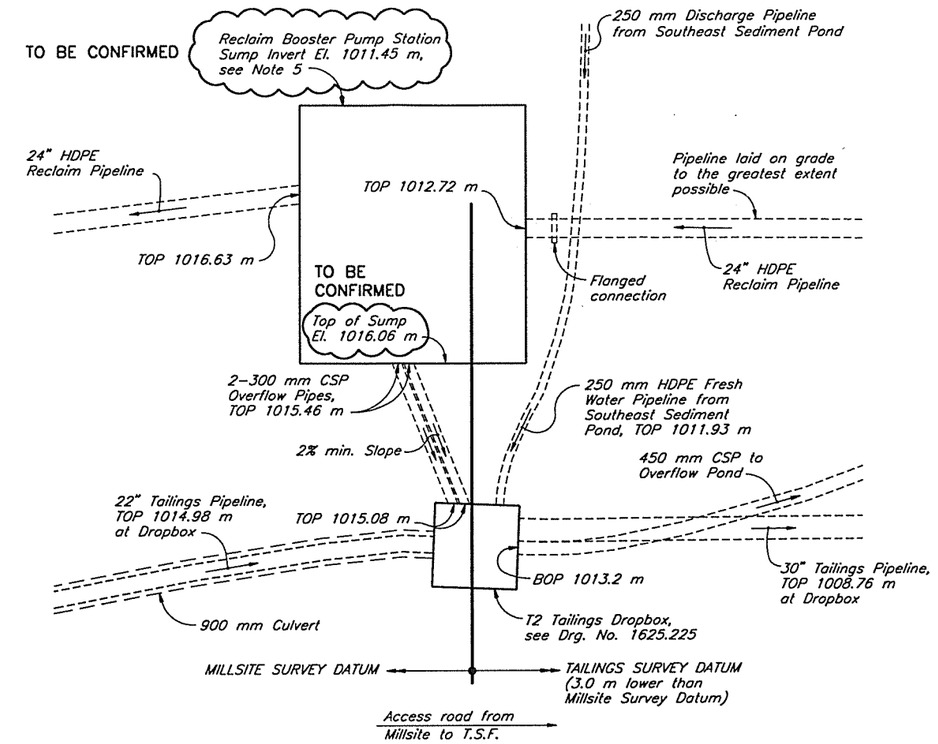

2 DETAIL A – SCHEMATIC

NTS

2 NOTES

1. The 500 m^3 capacity of the Overflow Pond, is sufficient to contain the contents of the upstream tailings pipeline. Pond located by Mount Polley Mining Corporation.
2. Radius of natural bends in HDPE pipelines not to be less than 25 pipe diameters.
3. Tailings and Reclaim pipelines uniformly graded between pipe containment channel and structures without high or low points.
4. Details of pipelines into Reclaim Booster Pumpstation sump determined in conjunction with CSFM.
5. Invert of pipe containment channel is assumed to be 1 m below local road elevation.
6. Local riprap required where 450 mm CSP overflow culvert exits overflow pond.
7. Top of discharge culvert for overflow pond to be 1000 mm below top of overflow pond.
8. As–built information provided by Mount Polley Mining Corporation.
9. Topography not updated by 1997 Flyover.
10. Pipeline elevations from Tailings Storage Facility to T2 Dropbox and Booster Pumpstation are based on Tailings Survey Datum (3.0 m lower than Millsite Datum). Survey control break is shown at the T2 Dropbox and Booster Pumpstaion.

LEGEND

TOP Top of Pipe

BOP Bottom of Pipe

Scale 10 5 0 10 20 30 40 50 Metres

DRG. NO.	DESCRIPTION
1625.225	TSF – TAILINGS PIPEWORK DETAILS – DROP BOX No. 2
1625.223	TSF – RECLAIM PIPELINE DETAILS
1625.219	TSF – TAILINGS DISTRIBUTION & RECLAIM SYSTEM – SECTIONS & DETAILS
1625.218	TSF – TAILINGS DISTRIBUTION & RECLAIM SYSTEM – PLAN

REFERENCE DRAWINGS

REV.	DATE	DESCRIPTION	APPROVED

REVISIONS

REV.	DATE	DESCRIPTION	APPROVED
2	AUG 14/97	AS–BUILT PIPELINES	KJB
1	MAY 30/97	REVISED LOCATION	
0	JULY 15/96	ISSUED FOR CONSTRUCTION	

REVISIONS

* "SIGNATURES AND PROFESSIONAL SEAL ON PREVIOUS REVISION"

KNIGHT PIESOLD LIMITED
CONSULTING ENGINEERS – VANCOUVER, B.C.

DESIGNED HPD/NM
DRAWN VY
CHECKED *
APPROVED *

MOUNT POLLEY MINING CORPORATION

MOUNT POLLEY PROJECT

TAILINGS STORAGE FACILITY
RECLAIM BOOSTER PUMP STATION AREA
GENERAL ARRANGEMENT

DATE JULY 15, 1996 | SCALE AS SHOWN | DRG. NO. 1625.226 | REV. 2

CAD FILE: \1625\052\052 1:500 Plot 1=0.50 AUG 14, 1997

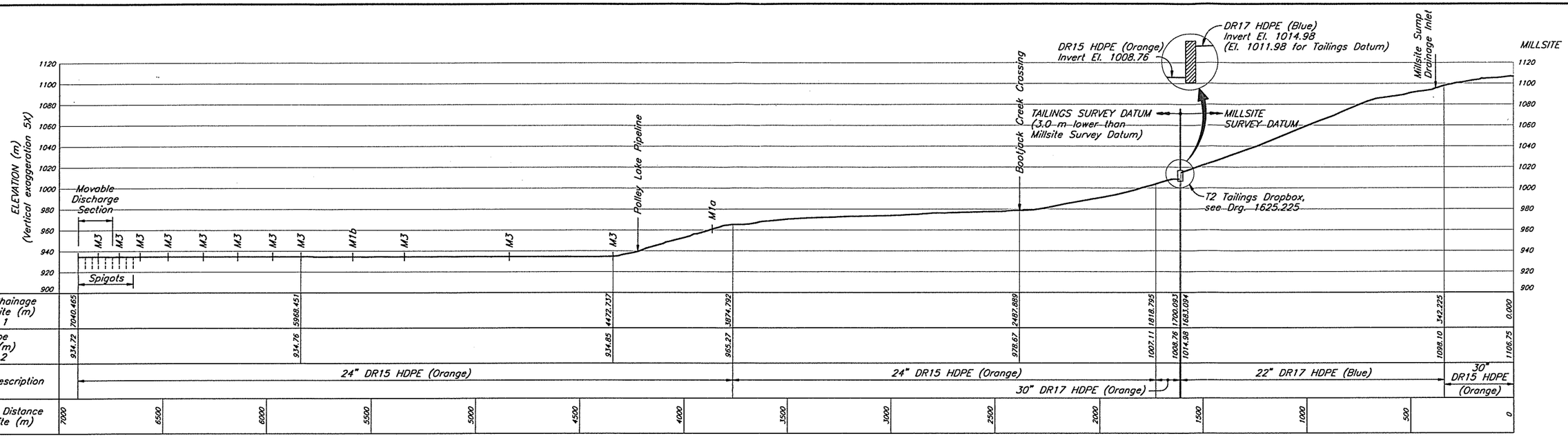

TAILINGS PIPELINE PROFILE 2

2 NOTES

1. Pipeline chainage is based on top of pipe (TOP) As-Built Survey.
2. Pipeline elevations from Tailings Storage Facility to T2 Dropbox and Reclaim Booster Pumpstation are based on Tailings Survey Datum (3.0 m lower than Millsite Datum). Survey control break is shown at T2 Dropbox and Booster Pumpstation.
3. Flanges in pipelines must be supported off the ground if pipelines are dragged into position.
4. Any section of HDPE pipeline damaged during installation by a local reduction in wall thickness of 10% or more cut out and replaced.
5. Reclaim pipeline installed only to original ground at El. 925 m. Additional ramps for barge to be added as required.
6. All steel and HDPE DR9 pipeline to be moved with each barge relocation.
7. Butt fusion joining of lower DR pipe to higher DR pipe requires end of lower DR pipe to be bevelled to same inside diameter as higher DR pipe.
8. Tailings offtakes (Mark 1 to 4) are shown on Drg. No. 1625.224.
9. Mark 2 and 4 offtakes not installed. Replaced by Movable Discharge Section.
10. Mark 3 offtakes not installed. Flanged connections left for future use.

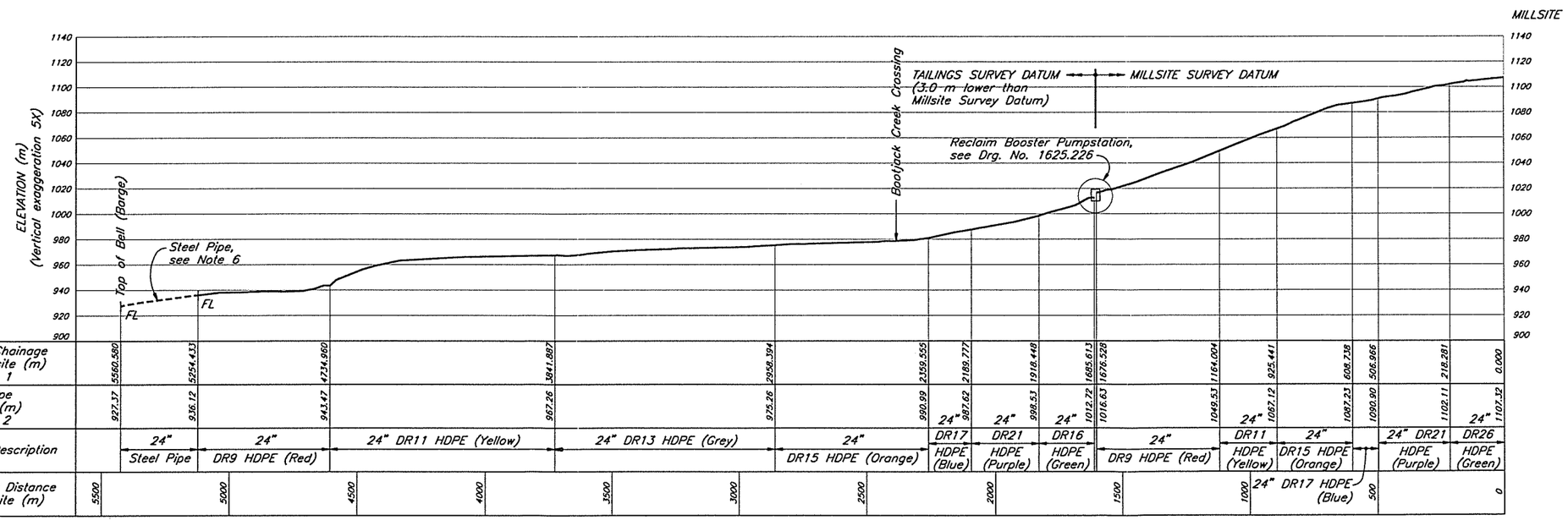

RECLAIM PIPELINE PROFILE 2

LEGEND

FL	Flange Joints
M1	Mark 1 Offtake (2)
M2	Mark 2 Offtake
M3	Mark 3 Offtake (10)
M4	Mark 4 Offtake
DR9	HDPE Pipe Dimensional Ratio (typical)

Scale 200 100 0 200 400 600 800 1000 Metres

* "SIGNATURES AND PROFESSIONAL SEAL ON PREVIOUS REVISION"

DRG. NO.	DESCRIPTION
1625.226	TSF – RECLAIM BOOSTER PUMP STATION AREA – GENERAL ARRANGEMENT
1625.225	TSF – TAILINGS PIPEWORK DETAILS – DROP BOX NO. 2
1625.224	TSF – TAILINGS DISTRIBUTION SYSTEM – DETAILS
1625.206	TSF – RECLAIM BARGE CHANNEL – EXCAVATION DETAILS

REFERENCE DRAWINGS

REV.	DATE	DESCRIPTION	APPROVED

REVISIONS

REV.	DATE	DESCRIPTION	APPROVED
2	AUG 14/97	AS-BUILT PIPELINES	KJB
1	MAY 30/97	REVISED DROPBOX/PUMPSTATION LOCATIONS	
0	JULY 15/96	ISSUED FOR CONSTRUCTION	

REVISIONS

KNIGHT PIESOLD LIMITED
CONSULTING ENGINEERS – VANCOUVER, B.C.

*

DESIGNED	HPD
DRAWN	NAR
CHECKED	*
APPROVED	*

MOUNT POLLEY MINING CORPORATION

MOUNT POLLEY PROJECT

TAILINGS STORAGE FACILITY
TAILINGS AND RECLAIM
PIPEWORK PROFILES

DATE JULY 15, 1996 | SCALE AS SHOWN | DRG. NO. 1625.228 | REV. 2

CAD FILE\1625\0458.DWG 1=10000 Plot 1=10 AUG. 14, 1997

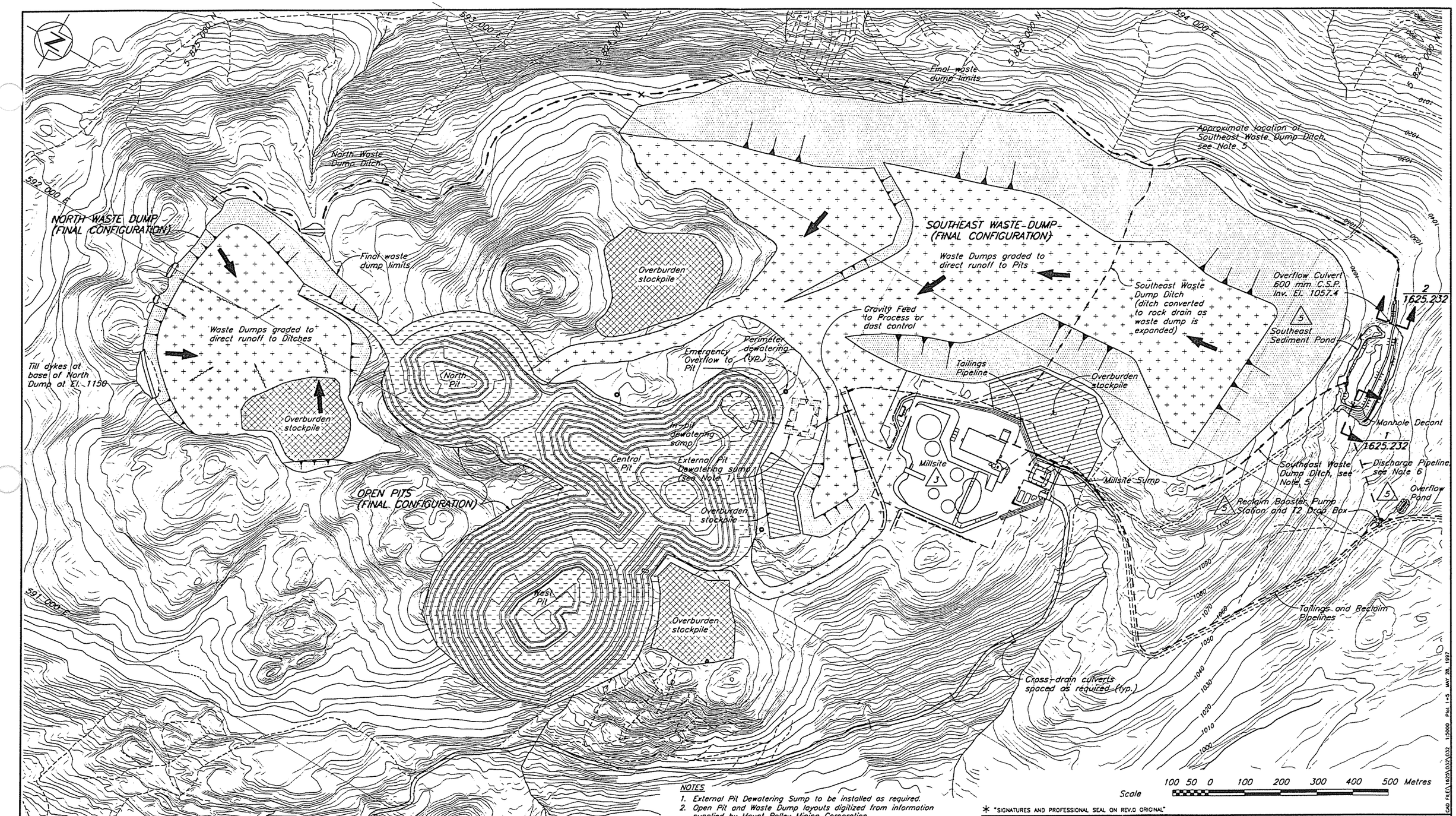

NOTES

1. External Pit Dewatering Sump to be installed as required.
2. Open Pit and Waste Dump layouts digitized from information supplied by Mount Polley Mining Corporation.
3. Location of Southeast Sediment Pond by Others.
4. As-built information provided by Mount Polley Mining Corporation.
5. As-built survey of Southeast Waste Ditch will be provided by Mount Polley Mining Corporation.
6. As-built survey of Discharge Pipeline will be provided by Mount Polley Mining Corporation.

DRG. NO.	DESCRIPTION
1625.232	DRAINAGE PLAN – SECTIONS AND DETAILS

REFERENCE DRAWINGS

REV.	DATE	DESCRIPTION	APPROVED
5	MAY 8/97	UPDATED SOUTHEAST SEDIMENT POND	KJB
4	JULY 15/96	RELOCATE BOOSTER PUMP STATION	
3	APRIL 1/96	MILLSITE AND CONTROL POND REVISED	

REVISIONS

REV.	DATE	DESCRIPTION	APPROVED
2	MAR 20/96	UPDATE DRAINAGE, MILLSITE & SOUTH SEDIMENT CONTROL POND	
1	MAR 14/96	UPDATED OPEN PITS, WASTEDUMPS, SITE DRAINAGE	
0	AUG 24/95	ISSUED FOR CONSTRUCTION	

REVISIONS

* "SIGNATURES AND PROFESSIONAL SEAL ON REV.0 ORIGINAL"

KNIGHT PIESOLD LIMITED
CONSULTING ENGINEERS – VANCOUVER, B.C.

MOUNT POLLEY MINING CORPORATION

MOUNT POLLEY PROJECT

DRAINAGE PLAN
MINE SITE

DESIGNED	KDE/MM
DRAWN	RDT/VY/NSD
CHECKED	*
APPROVED	*

DATE AUGUST 24, 1995 | SCALE AS SHOWN | DRG. NO. 1625.230 | REV. 5

CAD FILE: \1625.027\032 1:5000 PLN 1-5 MAY 28, 1997

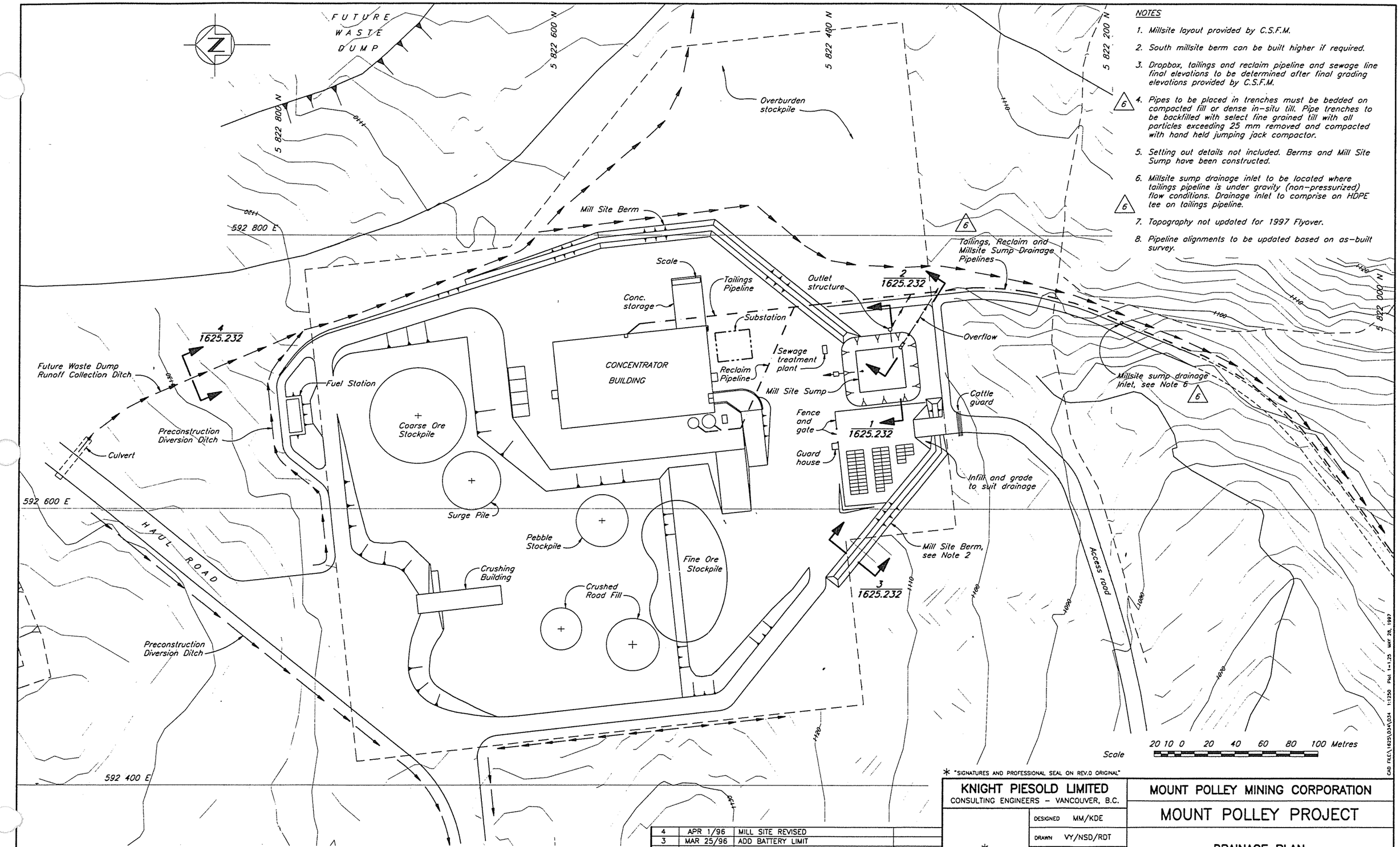

NOTES

1. Millsite layout provided by C.S.F.M.
2. South millsite berm can be built higher if required.
3. Dropbox, tailings and reclaim pipeline and sewage line final elevations to be determined after final grading elevations provided by C.S.F.M.
4. (6) Pipes to be placed in trenches must be bedded on compacted fill or dense in-situ till. Pipe trenches to be backfilled with select fine grained till with all particles exceeding 25 mm removed and compacted with hand held jumping jack compactor.
5. Setting out details not included. Berms and Mill Site Sump have been constructed.
6. Millsite sump drainage inlet to be located where tailings pipeline is under gravity (non-pressurized) flow conditions. Drainage inlet to comprise on HDPE tee on tailings pipeline. (6)
7. Topography not updated for 1997 Flyover.
8. Pipeline alignments to be updated based on as-built survey.

CAD FILE\1625\DAY\D34 1:1250 Plot 1=1.25 MAY 28, 1997

DRG. NO.	DESCRIPTION
1625.232	DRAINAGE PLAN – SECTIONS AND DETAILS

REFERENCE DRAWINGS

REV.	DATE	DESCRIPTION	APPROVED
6	MAY 30/97	REVISED MILLSITE SUMP DRAINAGE INLET	KJB
5	JULY 15/96	OVERFLOW POND NO. 1 ADDED	

REVISIONS

REV.	DATE	DESCRIPTION	APPROVED
4	APR 1/96	MILL SITE REVISED	
3	MAR 25/96	ADD BATTERY LIMIT	
2	MAR 20/96	UPDATE DRAINAGE AND MILLSITE	
1	MAR 14/96	RELOCATED OPEN PIT SUMP	
0	AUG 24/95	ISSUED FOR CONSTRUCTION	

REVISIONS

* "SIGNATURES AND PROFESSIONAL SEAL ON REV.0 ORIGINAL"

KNIGHT PIESOLD LIMITED
CONSULTING ENGINEERS – VANCOUVER, B.C.

MOUNT POLLEY MINING CORPORATION

MOUNT POLLEY PROJECT

DRAINAGE PLAN
MILLSITE

DESIGNED	MM/KDE
DRAWN	VY/NSD/RDT
CHECKED	*
APPROVED	*

DATE AUG. 24, 1995 | SCALE AS SHOWN | DRG. NO. 1625.231 | REV. 6

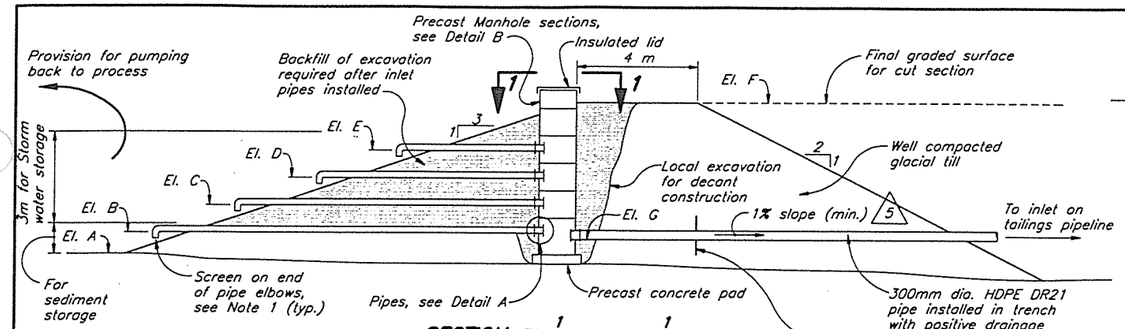

SECTION 1/1625.230 , 1/1625.231
TYPICAL SEDIMENT CONTROL POND SECTION
Scale A

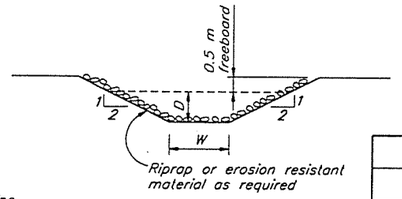

SECTION 4/1625.231
TYPICAL DITCH SECTION
Scale A

DITCH DIMENSIONS		
Ditch	W(m)	D(m)
All Mill Site Diversion Ditches	1.0	0.35
All Waste Dump Ditches	1.0	0.6

5 NOTES

1. Pipe elbows provided for oil skimming.
2. Sediment control pond fill sections to be constructed using suitable glacial till materials from local excavations.
3. Fill sections to be constructed in max. 0.5 m lifts and compacted prior to the placement of the next lift.
4. Silt fence and hay bales provided for sediment control.
5. Rockfill to comprise clean coarse gravel and cobbles.
6. All pond excavations and fill sections to be completed in low permeabilty glacial till materials.

El.	Millsite Sump *	Southeast Sediment Pond *	Pit Dewatering Sump
A	1100.00	1052.20	To Be Determined
B	1100.91	1053.56	
C	1101.81	1054.42	
D	1102.70	1055.29	
E	1103.61	1056.18	
F	1107.40	1058.00	
G	1100.56	1053.37	

5

* As Built

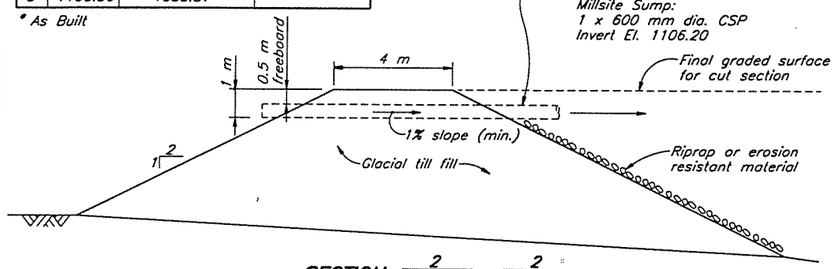

SECTION 2/1625.230, 2/1625.231
TYPICAL SEDIMENT CONTROL POND OVERFLOW CULVERT
Scale A

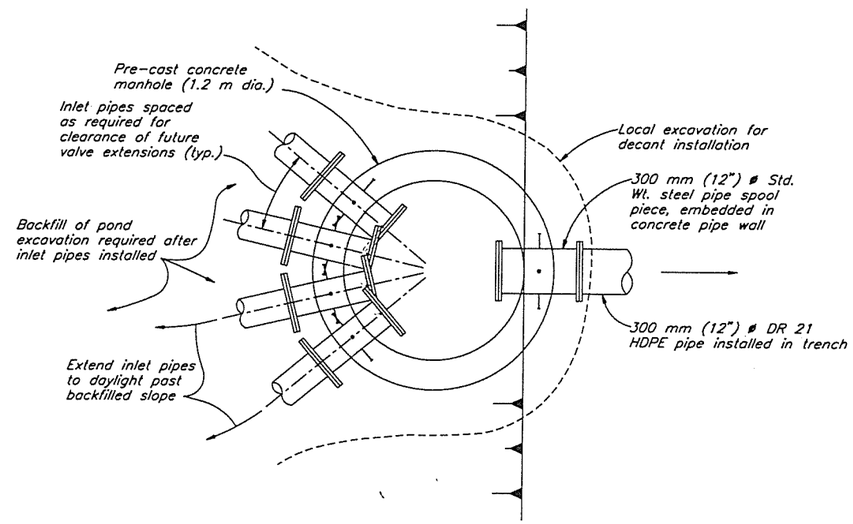

SECTION 1
Scale C

POND	STORAGE VOLUMES (m^3)		CRITERIA
	Live Storage	Dead Storage	
Southeast Sediment Pond	40,000 *	3,000 *	10yr 24 hour precipitation event at start-up of operations
Pit Dewatering Sump – Initial	Not required	Not required	1.5 x 10yr 24 hour precipitation event at start-up of operations
Pit Dewatering Sump – Final	24,400	6,700	
Millsite Sump	9,000 *	3,000 *	1.5 x 10yr 24 hour precipitation event

NOTES:

1. Pit Dewatering Sump size to be increased in conjunction with waste dump expansion.
2. Final Pit Dewatering Sump includes 10% of Open Pit inflows.
3. Typical Sediment Control Pond and Typical Sediment Control Pond Overflow Culverts cross-sections will change in fill construction and will be appropriately adjusted in the field as determined by the Engineer.

* As-built

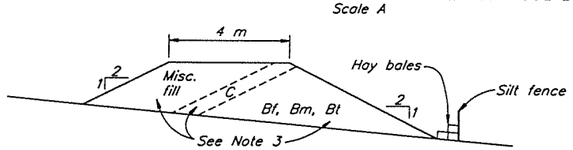

SECTION 3/1625.231
MILLSITE BERM SECTION
Scale A

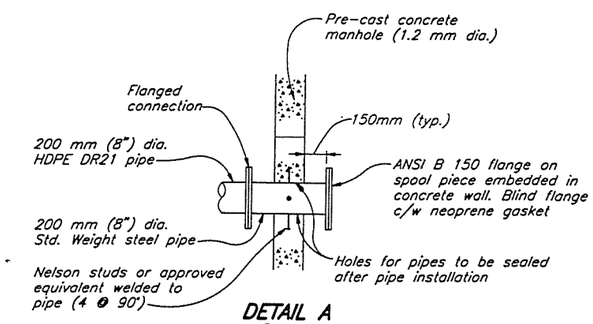

DETAIL A
Scale C

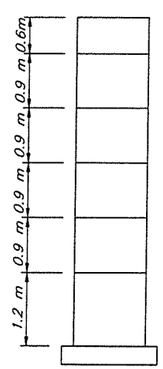

DETAIL B
TYPICAL MANHOLE SECTIONS FOR 5 m DEEP POND
NTS

1625.230	DRAINAGE PLAN – MINE SITE
1625.231	DRAINAGE PLAN – MILL SITE
DRG. NO.	DESCRIPTION

REFERENCE DRAWINGS

REV.	DATE	DESCRIPTION	APPROVED

REVISIONS

REV.	DATE	DESCRIPTION	APPROVED
5	MAY 8/97	ELEVATIONS MODIFIED	KJB
4	JULY 15/96	DETAIL AND ELEVATIONS MODIFIED	
3	APR 1/96	UPDATE SEDIMENT CONTROL POND	
2	MAR 20/96	UPDATE SEDIMENT CONTROL POND	
1	MAR 14/96	UPDATE DITCHES AND NOTE 3 ADDED	
0	AUG 24/95	ISSUED FOR CONSTRUCTION	

REVISIONS

* "SIGNATURES AND PROFESSIONAL SEAL ON REV.0 ORIGINAL"

KNIGHT PIESOLD LIMITED
CONSULTING ENGINEERS – VANCOUVER, B.C.

DESIGNED	KDE/MM
DRAWN	RDT/NSD
CHECKED	*
APPROVED	*

MOUNT POLLEY MINING CORPORATION

MOUNT POLLEY PROJECT

DRAINAGE PLAN
SECTIONS AND DETAILS

DATE AUGUST 24, 1995 | SCALE AS SHOWN | DRG. NO. 1625.232 | REV. 5

CAD FILE:\1625\033\033 1:100 Plot 1=0.1 STD.1 MAY 28, 1997

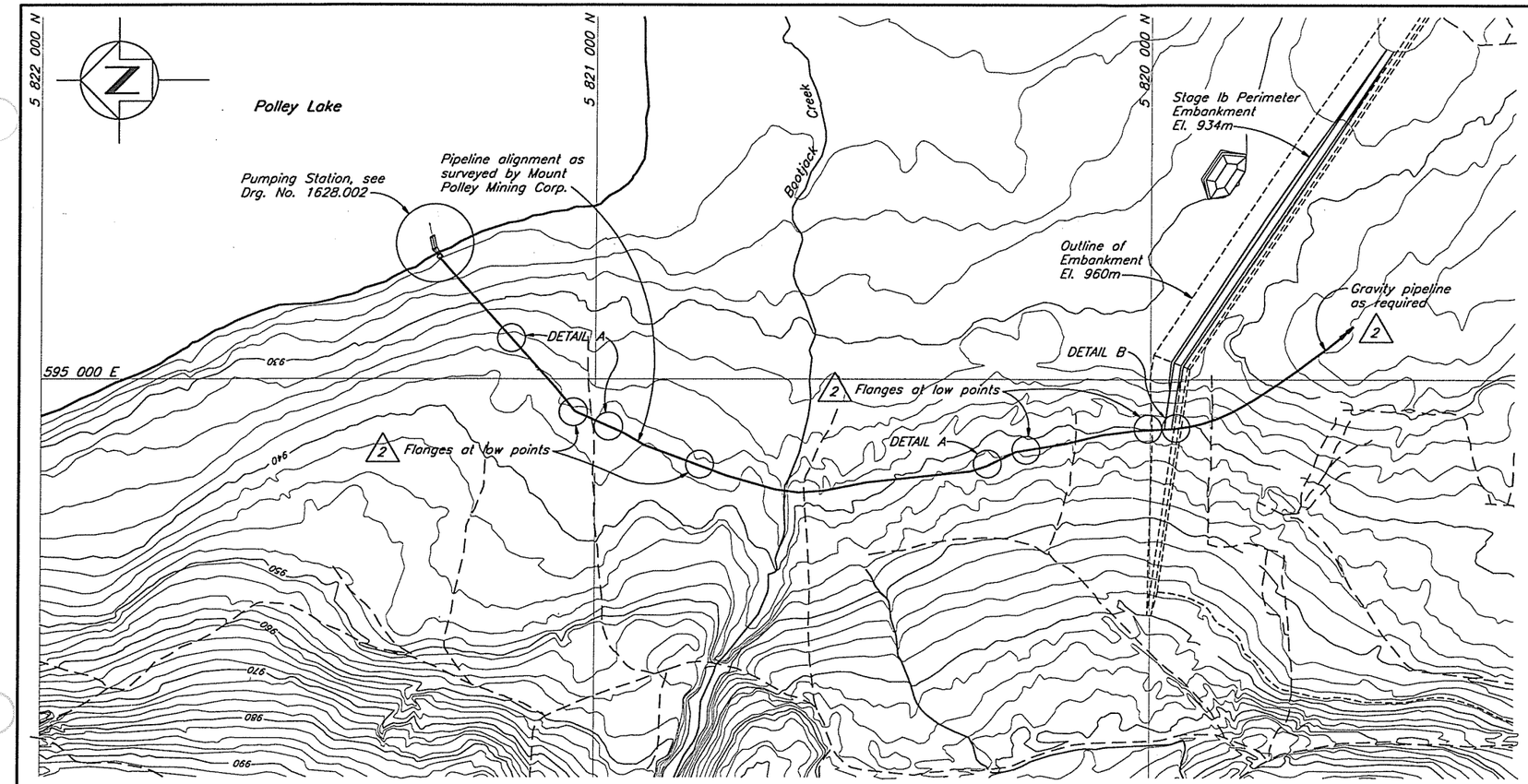

PLAN
Scale A

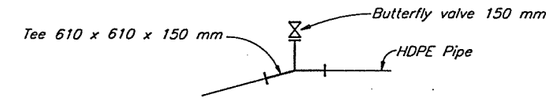

DETAIL A – AIR RELEASE VALVE SYSTEM
NTS

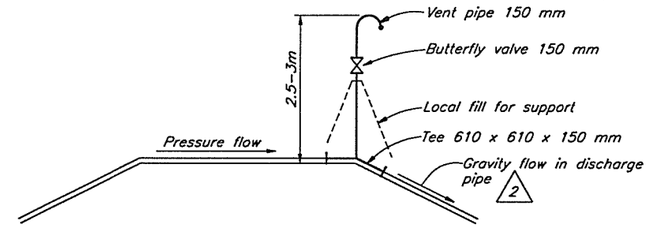

DETAIL B – AIR INTAKE VALVE AT EMBANKMENT
NTS

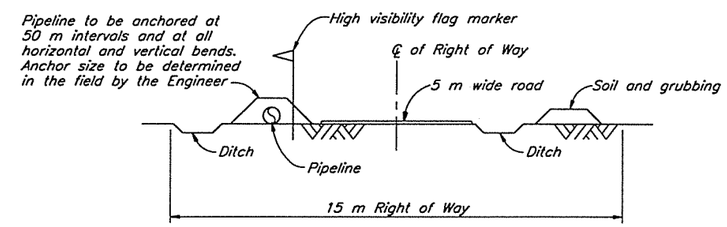

TYPICAL SECTION OF RIGHT OF WAY
NTS

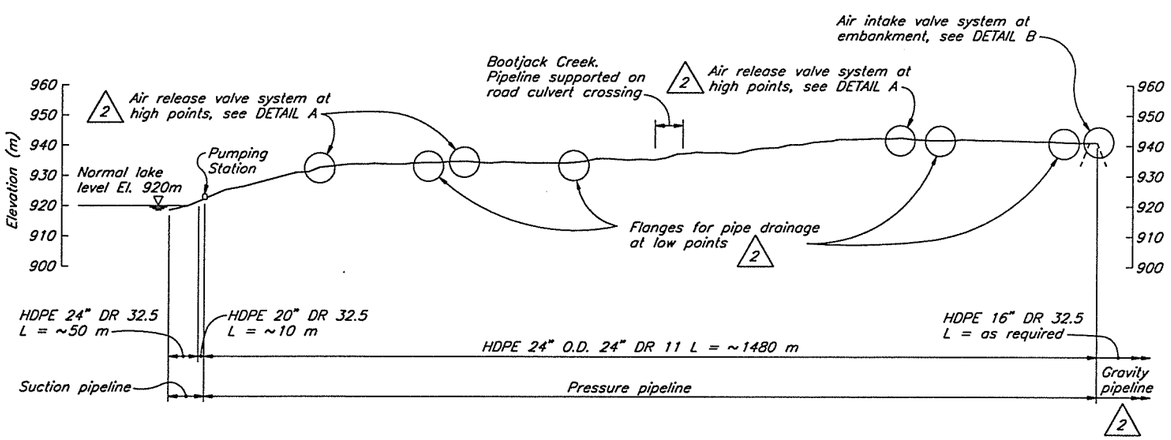

PIPELINE PROFILE
Horiz. Scale A, Vert. Scale B

NOTES

1. Pumping system has been designed for a maximum extraction rate of 8 000 USgpm. The extraction rate will be controlled by the pipeline I.D. and lengths selected for installation by Mount Polley Mining Corporation.
2. Pipeline profile is based on centreline of access road.
3. (2) Pipeline may be constructed with some high sections. Air release valves required as shown.
4. (2) Flanges to be provided at low points for pipe drainage, cleaning, and protection against freezing during prolonged shut down periods.
5. (2) Air intake valve system required at embankment to facilitate drainage. Additional air intakes may be required at high points.
6. All air release/intake systems to be protected against freezing during pumping.
7. Elevations on pipeline profile are from survey data and do not correspond accurately to topographic contours.
8. Valves to be AWWA quality.

B: 20 10 0 20 40 60 80 100 m
A: 100 0 100 200 300 400 500 m

CAD FILE:\1628\DRS.DG 1:5000 Plot 1=5 FEB 19, 1997

* "SIGNATURES AND PROFESSIONAL SEAL ON REV.0 ORIGINAL"

DRG. NO.	DESCRIPTION
1628.002	PUMPING STATION – GENERAL ARRANGEMENT

REFERENCE DRAWINGS

REV.	DATE	DESCRIPTION	APPROVED

REVISIONS

REV.	DATE	DESCRIPTION	APPROVED
2	FEB 19/97	REVISED PIPELINE DETAILS	TMA
1	JAN 31/97	ISSUED FOR CONSTRUCTION	
0	AUG 13/96	ISSUED FOR TENDER	

REVISIONS

KNIGHT PIESOLD LIMITED
CONSULTING ENGINEERS – VANCOUVER, B.C.

*

DESIGNED	NM
DRAWN	TAM
CHECKED	*
APPROVED	*

MOUNT POLLEY MINING CORPORATION

MOUNT POLLEY PROJECT

PUMPING SYSTEM
PLAN, PROFILE AND SECTION
GENERAL ARRANGEMENT

DATE AUG. 13, 1996 | SCALE AS SHOWN | DRG. NO. 1628.001 | REV. 2

Knight Piésold
CONSULTING

DRAFT

APPENDIX B

ANNUAL INSPECTION CHECKLIST

Ministry of Energy, Mines and Petroleum Resources

GUIDELINES FOR ANNUAL REPORTS

Tailings Impoundments

Statement

Tailings impoundments involve two important aspects of public concern and the additional concern of the safety of the workers. Structural stability of dams and impoundments is essential because, if failure occurs, large volumes of water and/or semi-fluid tailings would be released causing a serious threat to life and property and accompanying pollution problem. The other aspect of concern is the possibility of pollution during the operational and post-operational periods due to controlled discharges (by overflowing or decanting) and seepage downstream of the tailings dam.

Every operating and closed mine shall prepare and submit an annual report on operations and stability of all tailings dams and related works.

The report shall provide information and engineering details of the following:

- Plan and representative cross sections.
- Site photographs.
- Climatic review.
- Summary of past years' construction with a description of any problems and stabilization.
- Water balance review.
- Freeboard and storage availability (based on 200 year flood or the permitted design flood, whichever is more severe).
- Water discharge system, volumes and quality.
- Seepage occurrence and water quality.
- Surface water control and surface erosion.
- Construction control and instrumentation review.
    - Phreatic surfaces and piezometric data.
    - Settlement.
    - Lateral movement.
- Stability review and analysis (safety factors).

For major tailings impoundments as described in Part 9.1.3 of the Health, Safety and Reclamation Code for Mines in British Columbia, the report shall be submitted by a qualified geotechnical engineer registered as a Professional Engineer (P.Eng.) in British Columbia.

Tim Eaton

Tim Eaton, P.Eng.
Manager, Geotechnical Engineering

October 1993

Knight Piésold
CONSULTING

APPENDIX C

SAMPLE RECORD SHEETS

DRAFT

MOUNT POLLEY MINING CORPORATION
A DIVISION OF IMPERIAL METALS CORPORATION

Knight Piésold
CONSULTING

VIBRATING WIRE PIEZOMETER MONITORING SHEET

Project: Tailings Dam | **Project No:**

	Plane	Zone S : Zone B
Dam (Fill) Elev.	A (Ch. 20+00)	:
	B (Ch. 22+40)	:
	C (Ch. 18+50)	:
	D (Ch. 39+86)	:
	E (Ch. 17+60)	:

Date:	
Time:	
Inspector:	
Weather:	
Barometer:	(+65)/10=
Pond Level:	

FIELD CODE --------	SINCA Piezo ID	Piezo #	Readings: Temp (°C)	Readings: Frequency (Hz)
A1	A1-PE1-01	64100		
A2	A1-PE1-02	64098		
A3	A1-PE1-03	64105		
A4	A2-PE1-01	67191		
A5	A2-PE2-01	64104		
A6	A2-PE2-02	64103		
A7	A2-PE2-03	64101		
A8	A2-PE2-04	64099	Not Working	
A9	A2-PE2-05	64102		
A10	A2-PE2-08	67195		
A11	A0-PE1-01	69689		
A12	A2-PE1-02	69690		
B1	B1-PE1-01	64107		
B2	B1-PE1-02	64106		
B3	B1-PE1-03	64118		
B4	B2-PE1-01	67194	Not Working	
B5	B2-PE2-01	64110		
B6	B2-PE2-02	64116		
B7	B2-PE2-03	64109		
B8	B2-PE2-04	64108		
B9	B2-PE2-05	64113		
B10	B0-PE1-01	69692		
B11	B2-PE1-02	69693		
C1	C1-PE1-01	64111		
C2	C1-PE1-02	64115		
C3	C2-PE1-01	67196	Not Working	
C4	C2-PE2-01	64117	Not Working	
C5	C2-PE2-02	64119		
C6	C2-PE2-03	64112		
C7	C2-PE2-05	64114		
C8	C0-PE1-01	69694		
C9	C2-PE1-02	69695		

FIELD CODE --------	Piezo ID	Serial #	Readings: Temp or kΩ (R)	Readings: Hz or 10³Hz² (R)
D1	D1-PE1-02	66520		
D2	D2-PE1-01	67193	Not Working	
D3	D2-PE2-01	64096	N/W	
D4	D2-PE2-02	67192	Not Working	
R1	A0-PE2-01	43675		
R2	A0-PE2-02	43657		
R3	A2-PE2-06	43650		
R4	A2-PE2-07	43654		
R5	B0-PE2-01	43674		
R6	B0-PE2-02	43676		
R7	B2-PE2-06	43652		
R8	C0-PE2-01	43673	Not Working	
R9	C0-PE2-02	43658	Not Working	
R10	C1-PE1-04	43653		
R11	C2-PE2-06	43647		
R12	C2-PE2-07	43655		
R13	C2-PE2-08	43656		
R14	E2-PE2-01	43651		
R15	E2-PE2-02	43648		
R17	A1-PE1-04	43649		

FOUNDATION DRAIN FLOWS

DRAIN	TIME (SEC)	2nd (SEC)	3rd (SEC)
FD-1			
FD-2			
FD-3			
FD-4			
FD-5			

WATER ELEV. OF GW96-9 ABOVE TOP OF METAL CASING (m) =

Comments

M:\11162\13\Data\Piezometer Readings\May 31 00\[Fieldshtfinal.xls]A

MOUNT POLLEY MINING CORPORATION
MOUNT POLLEY MINE
TAILINGS STORAGE FACILITY

SURVEY MONUMENT COORDINATES - RECORD OF DISPLACEMENTS

M:\11162\13\Report\3\[3-TBL6-2.XLS]sample monument sheet

08/16/2000

STAGE 3 - ONGOING SURVEY						RECORD OF DISPLACEMENTS(2)						
	Observations	Date	N_n	E_n	El_n	DN	DE	DEl	D_{xy}	D_{xyz}	$D_{xy\text{-}total}$	$D_{xyz\text{-}total}$
A2-SM-09												
B2-SM-10												
C2-SM-11												
A2-SM-09												
B2-SM-10												
C2-SM-11												
A2-SM-09												
B2-SM-10												
C2-SM-11												
A2-SM-09												
B2-SM-10												
C2-SM-11												
A2-SM-09												
B2-SM-10												
C2-SM-11												

Notes:

1. Calculate displacements as shown below:
2. All coordinates and displacements are in metres

Total Displacement from initial survey (06 - Feb - 97)

$DN = N_n - N_o$

$DE = E_n - E_o$

$DEl = El_n - El_o$

$D_{xy\text{ - total}} = (DN^2 + DE^2)^{1/2}$

$D_{xyz\text{ - total}} = (DN^2 + DE^2 + DEl^2)^{1/2}$

Displacement between readings

$DN = N_{(n+1)} - N_n$

$DE = E_{(n+1)} - E_n$

$DEl = El_{(n+1)} - El_n$

$D_{xy} = (DN^2 + DE^2)^{1/2}$

$D_{xyz} = (DN^2 + DE^2 + DEl^2)^{1/2}$

Comments on calculations

1. Coordinate system is (Easting, Northing, Elevation) = f(x,y,z)
2. Coordinate system is as shown on Drawings (Example Dwg No. 11162-10-150 and 11162-10-151)

Revised: August 16, 20000
Revision A

Knight Piésold
CONSULTING

DRAFT

APPENDIX D

COMMUNICATIONS DIRECTORY

Knight Piésold
CONSULTING

APPENDIX D

COMMUNICATIONS DIRECTORY

NAME	ADDRESS	TELEPHONE
MOUNT POLLEY MINE	Box 12 Likely, BC V0L 1N0	(250) 790-2215

SITE PERSONNEL:

Dam Co-ordinator

- Don Parsons — Home
- Eric Leneve — Home

Dam Operator

- Don Ingram — Home
- Tim Fisch — Home

Technician

- Greg Smyth — Home

TECHNICAL ADVISORS:

Knight Piésold Ltd.	Suite 1400 750 West Pender St. Vancouver, BC, V6C 2T8	Office (604) 685-0543

(a) Ken Brouwer — Home
(b) Bruce Brown — Home
(c) Jeremy Haile — Home

DRAFT

OTHER AGENCIES

- R.C.M.P. Williams Lake, BC (250) 392-6211
- Comptroller of Water Rights, Victoria, BC (250) 387-6945
- Director of Provincial Emergency Program, Victoria, BC (800) 663-3456
- BC Water Management, Regional Manager, Williams Lake, BC (250) 398-4553 or (250) 398-4296
- MELP, Water Management Branch (Dam Safety Engineer), Victoria, BC (250) 387-3263
- MEM, Geotechnical Branch, Victoria, BC (250) 952-0480

DRAFT