MP00064

Knight Piésold Ltd.
CONSULTING ENGINEERS

MINISTRY OF ENERGY, MINES AND PETROLEUM RESOURCES
REC'D JUN 17 1996
MINE REVIEW AND PERMITTING BRANCH

Suite 1400
750 West Pender Street
Vancouver, British Columbia
Canada V6C 2T8
Telephone (604) 685-0543
Telefax (604) 685-0147

CIS: 72360,477 1626.01
YOUR REFERENCE
OUR REFERENCE 6/1944
NUMBER June 14, 1996

Mr. George Headley
Senior Geotechnical Engineer
Ministry of Energy, Mines and Petroleum Resources
4th Floor, 1810 Blanshard Street
Victoria, B.C. V8V 1X4

Dear George;

Re: Mt. Polley Project - Tailings Storage Facility

Please find attached one copy of the Mt. Polley Tailings Storage Facility Construction Drawings and a corresponding drawing list. The drawings are being issued to support an Amendment to the Work Systems Application for the Mt. Polley Tailings Storage Facility. Some revisions have been made to the design since your last review. Some of the more significant revisions are summarized below:

1. Current mine reserves for are 82.3 million tonnes. The mill throughput has been revised to 6.5 million tonnes per year, or 17,800 tonnes per day.

2. The first stage (Ib) of the tailings embankment has been raised from El. 931m to El. 934m in response to the increased throughput. The ultimate embankment height has been increased from El. 960 m to El. 965 m to accommodate the additional ore reserves.

3. The volume of make up water which can be stored in the facility has been increased from 2,000,000 cubic metres to 2,500,000 cubic metres, again in response to the increased throughput.

4. Construction of the toe drain has been deferred to the second stage of the embankment (Stage II) in 1998. The toe drain conveyance pipes and extensions will be installed this year, however.

5. An alternate specification for the filter sand has been added (Material Type B), as shown on Dwg. No. 1625.212. The specification is taken from the

paper "Filters for Silts and Clays", by Sherard et al., which was published in the ASCE Journal of Geotechnical Engineering, Volume 110, No. GT6, June 1984.

6. The tailings and reclaim lines are to be installed in pipe containment channels all the way from the mill to the tailings facility. The pipes are no longer buried up to the Bootjack Creek Crossing. This is shown on Dwg. No. 1625.219.

7. A separate runoff collection ditch has been added up gradient from the pipe containment channel on the road/pipeline cross section, also as shown on Dwg. No. 1625.219.

8. A fourth instrumentation plane, Plane D, has been added at the Perimeter Embankment, as shown on Dwg. Nos. 1625.220 and 1625.221.

We are also including a copy of Dwg. No. 1625.111 Rev. ~~2~~ 3. This drawing was originally issued in the Detailed Design Report and shows the cross sections for the ultimate embankments, based on current parameters. It is conceptual only and will require adjustment throughout the life of the project as actual operational parameters are determined. This methodology is consistent with the observational design approach which we advocate on all mining projects.

We trust that this material satisfies your requirements at this time. Please feel free to contact us at any time should you have any questions or comments.

Yours very truly,
KNIGHT PIÉSOLD LTD.

K.J. Brouwer, P.Eng.
Director
KDE

cc: Mr. Malcolm Swallow, Imperial Metals

Knight Piésold Ltd.
CONSULTING ENGINEERS

TABLE 1

MT. POLLEY PROJECT
CONSTRUCTION DRAWINGS

15-May-96

KP No.	Drawing No.	Rev. No.	Title	Plot Scale	Date Issued	Issued
D19	1625.200	3	Overall Site Plan	1=20	24-May-96	For Construction
D18	1625.201	5	Tailings Storage Facility - Basin Preparation and Basin Liner	1=5	24-May-96	For Construction
D20	1625.202	5	Tailings Storage Facility - Foundation Preparation and Basin Liner - Sections and Details	1=5	24-May-96	For Construction
D17	1625.205	5	Tailings Storage Facility - Stage Ib Tailings Impoundment - General Arrangement	1=5	24-May-96	For Construction
D31	1625.210	4	Tailings Storage Facility - Main and Perimeter Embankments - Plan	1=2.5	24-May-96	For Construction
D21	1625.211	5	Tailings Storage Facility - Tailings Embankment - Sections and Details	1=0.5	28-May-96	For Construction
D30	1625.212	1	Tailings Storage Facility - Material Specifications	1=1	24-May-96	For Construction
D22	1625.213	6	Tailings Storage Facility - Sediment Control and Seepage Collection	1=2.5	24-May-96	For Construction
D23	1625.214	6	Tailings Storage Facility - Sediment Control and Seepage Collection - Sections and Details	1=0.5	6-Jun-96	For Construction
D24	1625.215	4	Tailings Storage Facility - Surface Water Control - Plan and Profile	1=20	6-Jun-96	For Construction
D25	1625.216	3	Tailings Storage Facility - Surface Water Control - Sections and Details	1=0.1	6-Jun-96	For Construction
D35	1625.217	2	Tailings Storage Facility - Surface Water Control - Flow Control Structures - Concrete Details	1=0.25	6-Jun-96	For Construction
D26	1625.218	4	Tailings Storage Facility - Tailings Distribution and Reclaim System - Plan and Profile	1=10	6-Jun-96	For Construction
D27	1625.219	4	Tailings Storage Facility - Tailings Distribution and Reclaim System - Sections and Details	1=0.2	10-Jun-96	For Construction
D28	1625.220	5	Tailings Storage Facility - Instrumentation	1=2.5	6-Jun-96	For Construction
D29	1625.221	3	Tailings Storage Facility - Instrumentation - Sections and Details	1=0.02	6-Jun-96	For Construction

J:\JOB\DATA\1625\DRGLIST.XLS

NOTE

1. Mill site layout as per CSFM Engineering.
2. Diversion ditch not required for 1996 construction.

CAD FILE:\1625\01\R\019 1=20000 Plot 1=20 May 23, 1996

REV.	DATE	DESCRIPTION	APPROVED
3	MAY 24/96	ISSUED FOR CONSTRUCTION	KJB
2	APRIL 1/95	MILLSITE AND CONTROL POND REVISED	
1	MAR 25/96	UPDATE OPEN PITS, WASTE DUMP, SITE DRAINAGE & ROADS	
0	JUNE 2/95	ISSUED FOR TENDER	

REVISIONS

DRG. NO.	DESCRIPTION

REFERENCE DRAWINGS

REV.	DATE	DESCRIPTION	APPROVED

REVISIONS

KNIGHT PIESOLD LIMITED
CONSULTING ENGINEERS - VANCOUVER, B.C.

PROFESSIONAL ENGINEER — PROVINCE OF BRITISH COLUMBIA — K. D. K. EMBREE

DESIGNED	KDE/KGB
DRAWN	RDT/NSD
CHECKED	MOB
APPROVED	KJB

IMPERIAL METALS CORPORATION

MT. POLLEY PROJECT

OVERALL SITE PLAN

DATE JUNE 2, 1995 | SCALE AS SHOWN | DRG. NO. 510-12-01-1625.200 | REV. 3

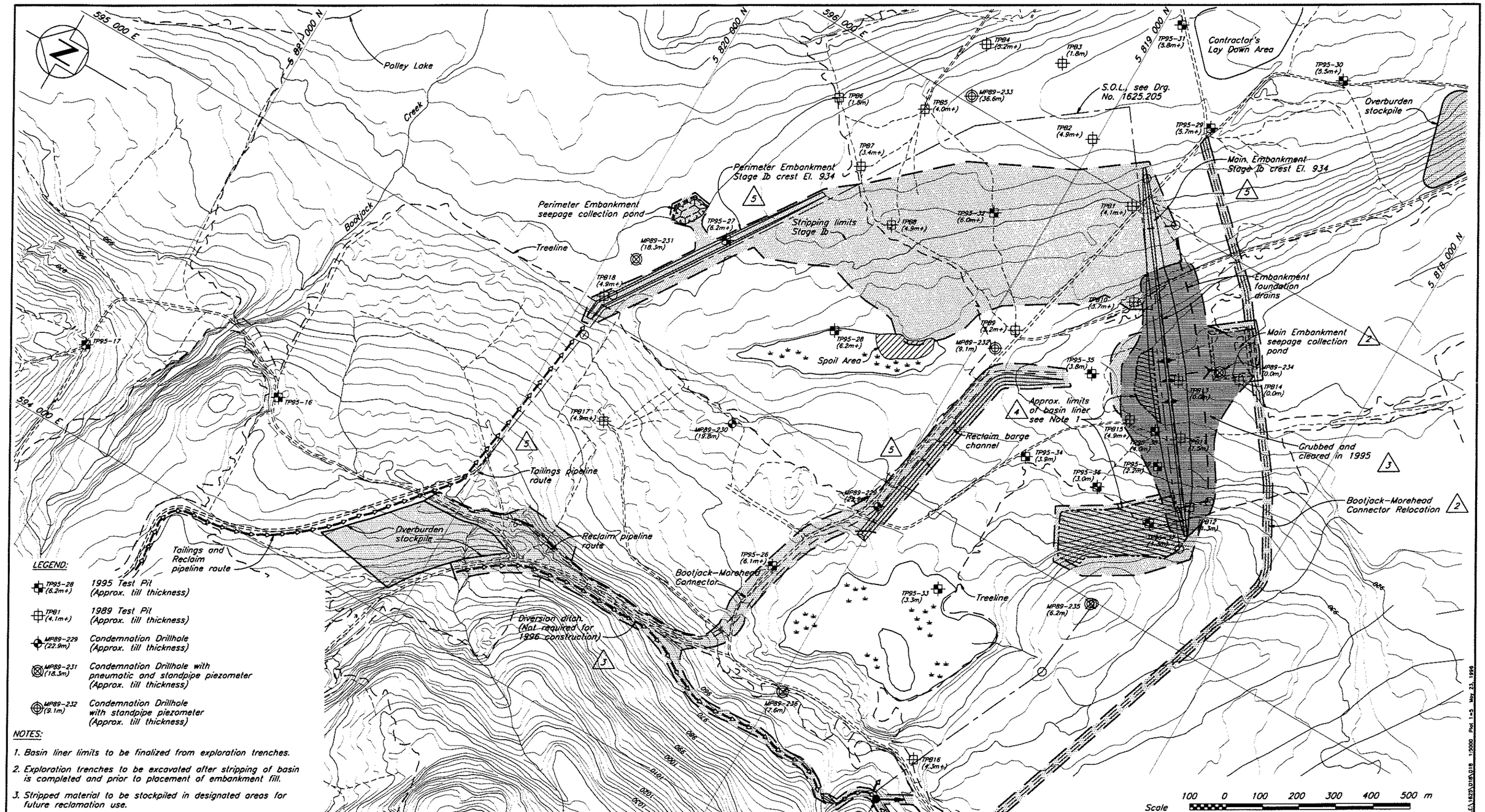

LEGEND:

- TP95-28 (6.2m+) — 1995 Test Pit (Approx. till thickness)
- TP81 (4.1m+) — 1989 Test Pit (Approx. till thickness)
- MP89-229 (22.9m) — Condemnation Drillhole (Approx. till thickness)
- MP89-231 (18.3m) — Condemnation Drillhole with pneumatic and standpipe piezometer (Approx. till thickness)
- MP89-232 (9.1m) — Condemnation Drillhole with standpipe piezometer (Approx. till thickness)

NOTES:

1. Basin liner limits to be finalized from exploration trenches.
2. Exploration trenches to be excavated after stripping of basin is completed and prior to placement of embankment fill.
3. Stripped material to be stockpiled in designated areas for future reclamation use.
4. All drillholes in tailing basin to be grouted as per technical specifications.
5. Clearing around Perimeter Embankment Seepage Collection Pond approx. only and will be finalized in the field by the Engineer.
6. Soft foundation soils to be removed as required by the Engineer.

DRG. NO.	DESCRIPTION
1625.202	TAILINGS STORAGE FACILITY – FOUNDATION PREPARATION AND BASIN LINER – SECTIONS AND DETAILS
1625.205	TAILINGS STORAGE FACILITY – STAGE Ib IMPOUNDMENT – GENERAL ARRANGEMENT

REFERENCE DRAWINGS

REV.	DATE	DESCRIPTION	APPROVED
5	MAY 24/96	ISSUED FOR CONSTRUCTION	KJB
4	APR 11/96	RE-ISSUED FOR TENDER	
3	APRIL 1/96	NOTE 4 AND STRIPPING LIMITS	
2	MAR 25/96	UPDATE ROADS & DRAINAGE	
1	JULY 27/95	NOTE 4 AND STRIPPING LIMITS	
0	JUNE 2/95	ISSUED FOR TENDER	

REVISIONS

KNIGHT PIESOLD LIMITED
CONSULTING ENGINEERS – VANCOUVER, B.C.

PROFESSIONAL ENGINEER — PROVINCE OF BRITISH COLUMBIA — K.D. KLEINGREE

DESIGNED	KDE
DRAWN	RDT
CHECKED	MDB
APPROVED	KJB

IMPERIAL METALS CORPORATION

MT. POLLEY PROJECT

TAILINGS STORAGE FACILITY
BASIN PREPARATION
AND BASIN LINER

DATE JUNE 2, 1995 | SCALE AS SHOWN | DRG. NO. 510-11-01-1625.201 | REV. 5

CAD FILE: \1625\D18\D18 1:5000 Plot 1-5 May 23, 1996

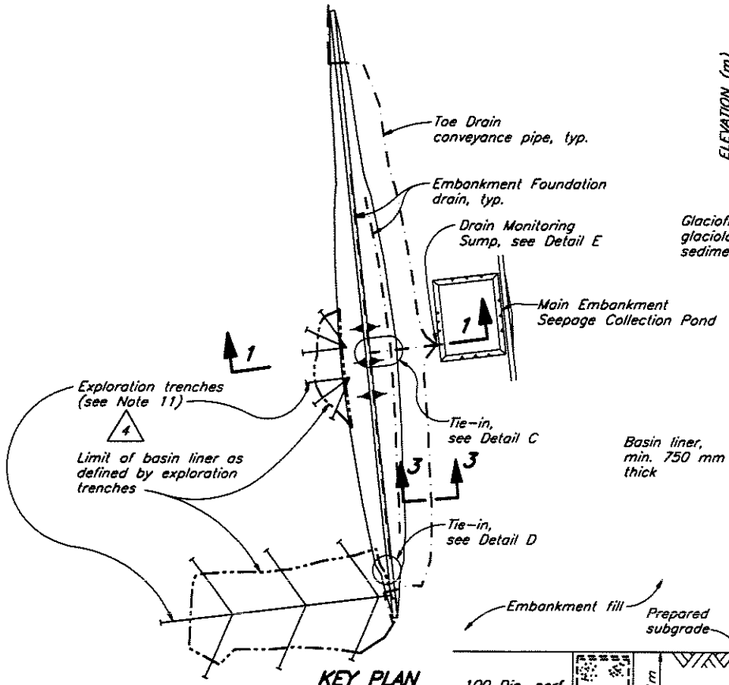

KEY PLAN
Scale A

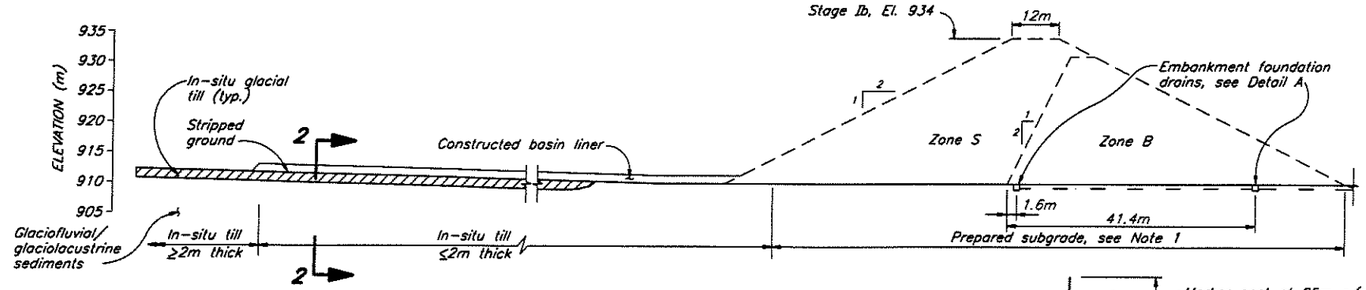

SECTION 1
Foundation Preparation
Scale B

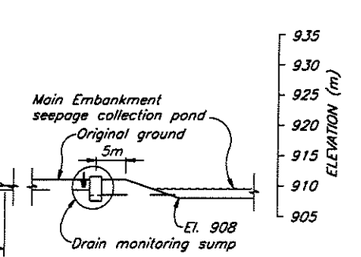

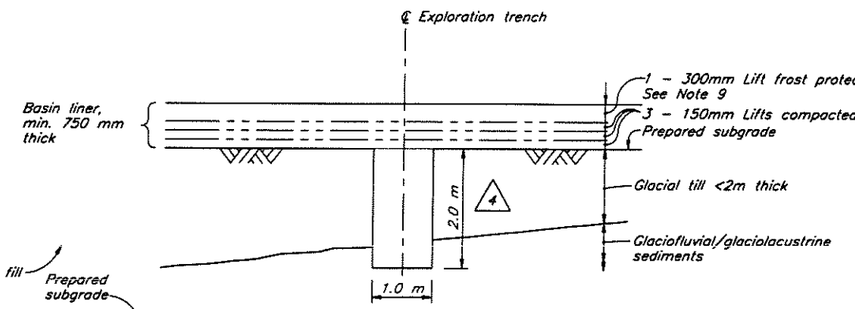

SECTION 2
Basin Liner
Scale D

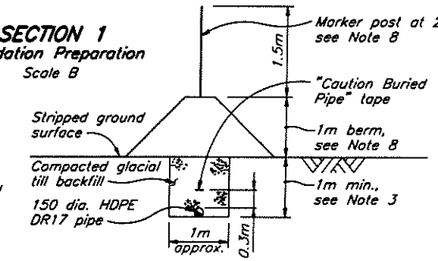

SECTION 3
Toe Drain Conveyance Pipe
Scale D

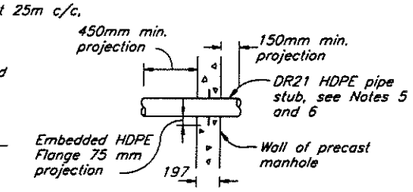

DETAIL F
HDPE Stub and Flange
Scale C

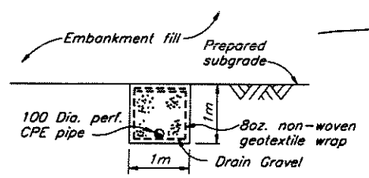

DETAIL A
Embankment Foundation Drain
Scale D

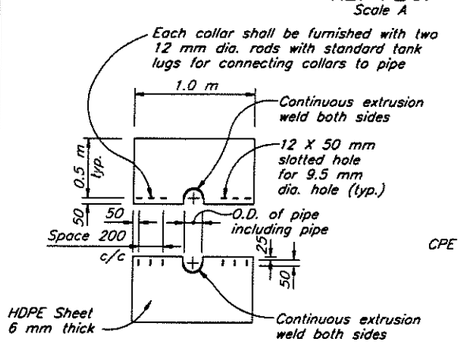

DETAIL B
HDPE Seepage Collar
Scale C

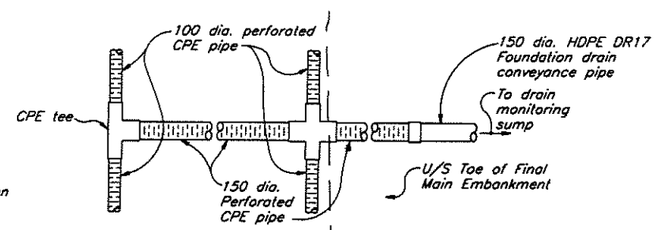

DETAIL C
Embankment Foundation Drain Tie-in
Scale C

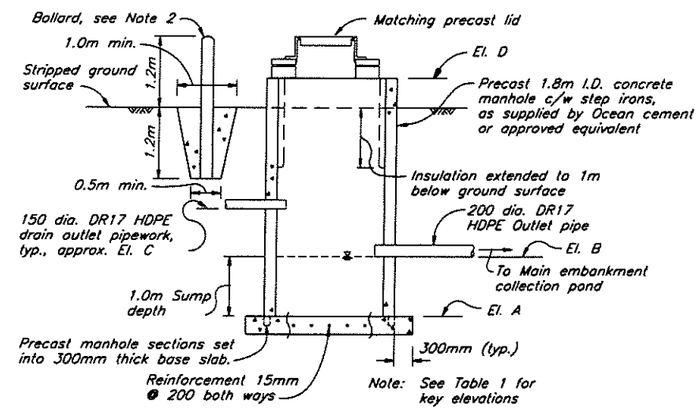

SECTION 4
Scale D

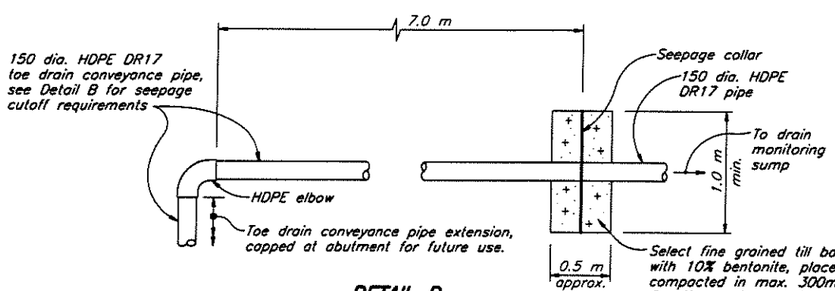

DETAIL D
Toe Drain Tie-in
Scale C

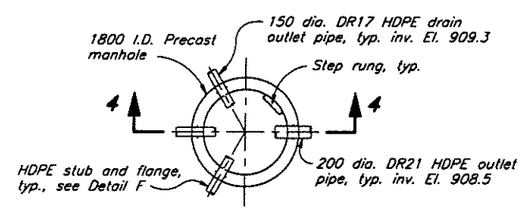

DETAIL E
Drain Monitoring Sump
Scale D

NOTES

1. Subgrade preparation to comprise stripping of topsoil and organics and removing saturated materials to establish a competent, bearing surface for fill placement as directed by the Engineer.
2. Three bollards required at 120°, 1.0m from sump. Bollards to be 200 dia. Std. Weight steel pipe filled with concrete.
3. All pipeworks to have a minimum of 1m of cover for frost protection.
4. HDPE stubs and flanges to be cast into manhole.
5. For Main Embankment drain monitoring sump 150 dia. pipe stubs @ invert El. 909.3, 3 required. 200 dia. pipe stub @ invert El. 908.5, 1 required.
6. For Perimeter Embankment drain monitoring sump 150 dia. pipe stub, 1 required. 200 dia. pipe stub, 1 required.
7. Drain monitoring sump invert elevations shown on Table 1 may be adjusted in the field by the Engineer.
8. Buried pipework to be covered by a berm and clearly marked by a line of stakes.
9. Frost protection layer to be placed only on right abutment area of basin liner. Not required in valley bottom.
10. All perforated pipe to have drain gravel and geotextile wrap, as shown on Detail A.
11. (4) Exploration trenches to be fit in field in order to adjust for terrain.

Table 1

ELEV.	MAIN EMBANKMENT	PERIMETER EMBANKMENT
A	907.5	924.5
B	908.5	925.5
C	909.3	926.5
D	911.5	930.5

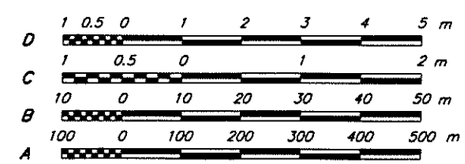

DRG. NO.	DESCRIPTION

REFERENCE DRAWINGS

REV.	DATE	DESCRIPTION	APPROVED
5	MAY 24/96	ISSUED FOR CONSTRUCTION	KJB

REVISIONS

REV.	DATE	DESCRIPTION	APPROVED
4	APR 18/96	UPDATE FOR EXPLORATION TRENCH	
3	MAR 25/96	UPDATE DRAINAGE & SEEPAGE COLLAR	
2	JAN 18/96	REVISIONS FOR REVIEW COMMENTS	
1	JULY 15/95	FROST LAYER REVISED AND NOTE 9 ADDED	
0	JUNE 2/95	ISSUED FOR TENDER	

REVISIONS

KNIGHT PIESOLD LIMITED
CONSULTING ENGINEERS - VANCOUVER, B.C.

PROFESSIONAL ENGINEER — PROVINCE OF BRITISH COLUMBIA — K. D. KYENDREE

DESIGNED	KDE
DRAWN	RDT/WAL/NSD
CHECKED	KDE
APPROVED	KJB

IMPERIAL METALS CORPORATION

MT. POLLEY PROJECT

TAILINGS STORAGE FACILITY
FOUNDATION PREPARATION AND
BASIN LINER
SECTION AND DETAILS

DATE JUNE 2, 1995 | SCALE AS SHOWN | DRG. NO. 510-15-01-1625.202 | REV. 5

CAD FILE: L:\1625\1202\1202_L5000_Plot 1=5 May 24, 1996

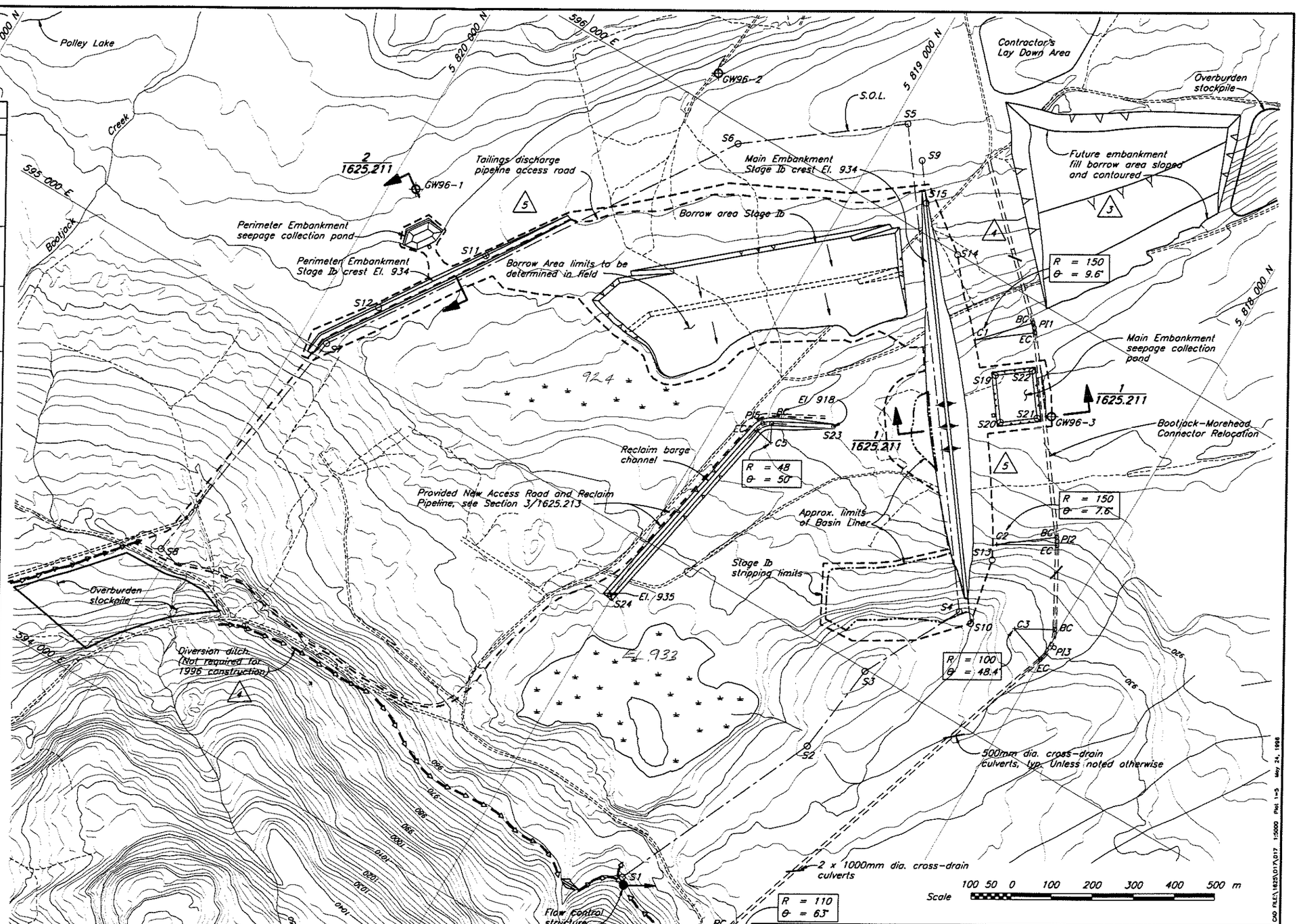

SETTING OUT POINTS

Description	Point	Northing	Easting
Setting Out Line (S.O.L.) △5	S1	5 818 622.590	594 258.688
	S2	5 818 392.402	594 765.778
	S3	5 818 365.375	594 995.246
	S4	5 818 238.539	595 240.350
	S5	5 818 966.983	596 208.866
	S6	5 819 304.035	595 955.881
	S7	5 819 932.926	595 020.397
	S8	5 820 025.632	594 375.061
Stage Ib Main Embankment ℄	S9	5 818 891.014	596 150.000
	S10	5 818 199.059	595 230.000
Perimeter Embankment ℄	S11	5 819 705.338	595 404.339
	S12	5 819 869.082	595 160.766
Stripping Limits	S13	5 818 233.372	595 392.851
	S14	5 818 696.416	595 997.943
	S15	5 818 828.350	596 066.684
Main Embkmnt. Seepage Collection Pond	S19	5 818 461.203	595 790.290
	S20	5 818 391.047	595 697.013
	S21	5 818 317.351	595 752.085
	S22	5 818 387.678	595 845.590
Reclaim Barge Channel	S23	5 818 743.870	595 479.103
	C5	5 818 856.841	595 365.834
	BC	5 818 879.675	595 408.055
	EC	5 818 903.862	595 375.481
	PI5	5 818 899.065	595 397.857
	S24	5 819 007.126	594 840.706
△3	C1	5 818 550.264	595 840.492
	BC	5 818 447.016	595 949.303
	EC	5 818 430.386	595 930.655
	PI1	5 818 437.922	595 940.674
△3	C2	5 818 243.100	595 432.097
	BC	5 818 123.222	595 522.260
	EC	5 818 112.295	595 505.514
	PI2	5 818 117.199	595 514.252
Bootjack - Moorehead Connector Relocation	C3	5 818 096.998	595 273.949
	BC	5 818 009.797	595 322.894
	EC	5 818 002.473	595 241.322
	PI3	5 817 987.827	595 283.752
	C4	5 818 228.844	594 248.367
	BC	5 818 333.078	594 283.514
	EC	5 818 307.478	594 171.448
	PI4	5 818 354.995	594 220.025

LEGEND:

- GW96-1 ⊕ – Groundwater monitoring well
- C1 – Curve No. 1 (typ.)
- BC – Begin Curve
- EC – End Curve
- PI1 – Point of Intersection for Curve No. 1

NOTES

1. Setting Out Line (SOL) is the upstream shoulder of the Stage VII embankment.
2. Stripping and clearing required 5m beyond seepage collection ponds and pipeworks.
3. Perimeter Embankment Seepage Collection Pond to be located in the field by the Engineer.

DRG. NO.	DESCRIPTION
1625.211	TAILINGS STORAGE FACILITY – TAILINGS EMBANKMENT – SECTIONS AND DETAILS

REFERENCE DRAWINGS

REV.	DATE	DESCRIPTION	APPROVED
5	MAY 24/96	ISSUED FOR CONSTRUCTION	KJB
4	APR 1/96	DIVERSION DITCH NOTE AND CULVERT	
3	MAR 22/96	UPDATE ROAD & BORROW AREA ADDED	

REVISIONS

REV.	DATE	DESCRIPTION	APPROVED
2	JAN. 18/96	REVISED SEEPAGE COLLECTION POND	
1	JULY 27/95	POINT S16 AND S17 DELETED	
0	JUNE 2/95	ISSUED FOR TENDER	

REVISIONS

KNIGHT PIESOLD LIMITED
CONSULTING ENGINEERS – VANCOUVER, B.C.

PROVINCE OF BRITISH COLUMBIA – K. D. KEMMREE – PROFESSIONAL ENGINEER

DESIGNED KDE/KGB
DRAWN WAL/VY/NSD
CHECKED MOB
APPROVED KJB

IMPERIAL METALS CORPORATION

MT. POLLEY PROJECT

TAILINGS STORAGE FACILITY
STAGE Ib TAILINGS IMPOUNDMENT
GENERAL ARRANGEMENT

DATE JUNE 2, 1995 | SCALE AS SHOWN | DRG. NO. 510-12-02-1625.205 | REV. 5

CAD FILE: \1625\017\017 1:5000 Plot 1=5 May 24, 1996

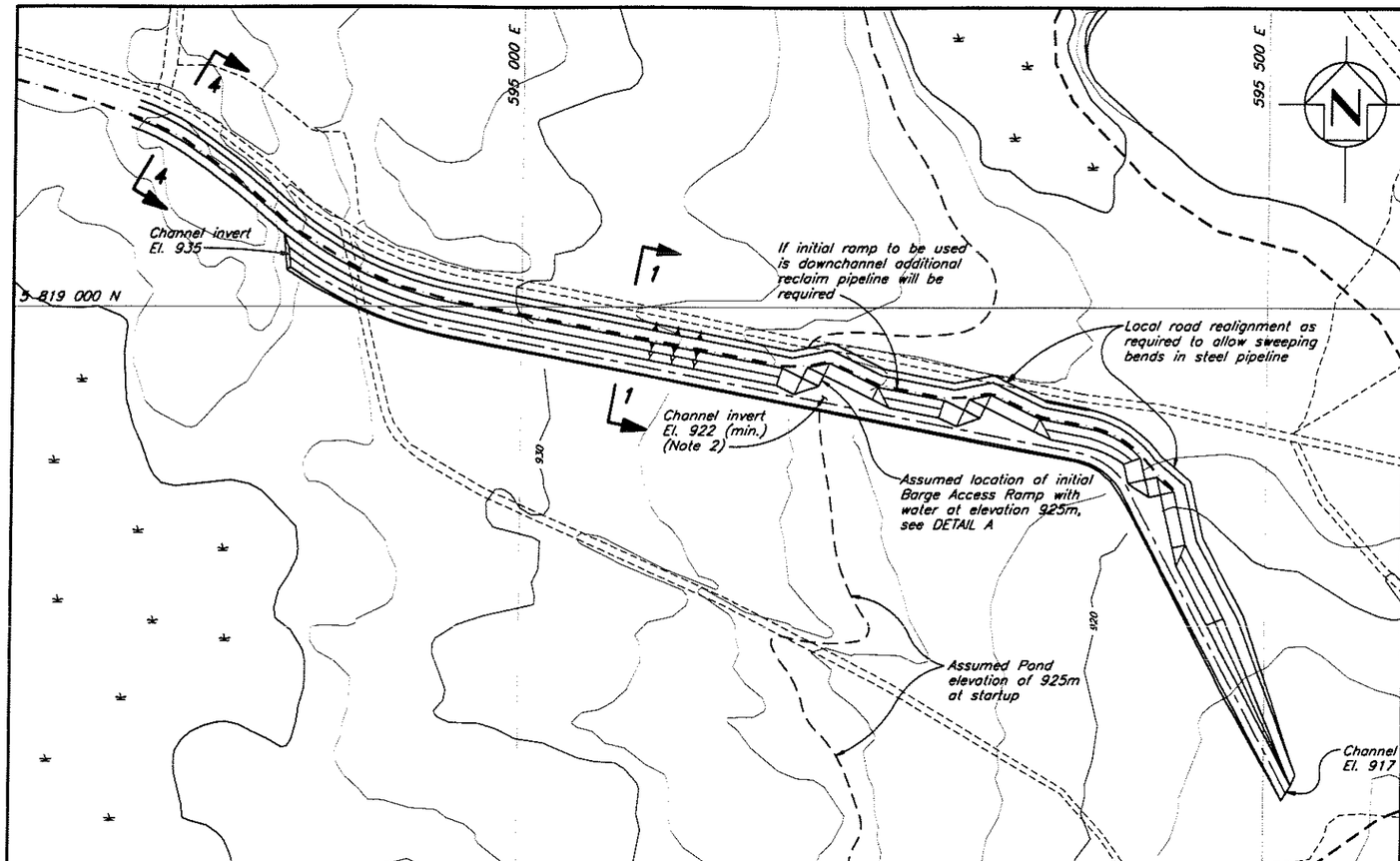

PLAN – RECLAIM BARGE CHANNEL

Scale A

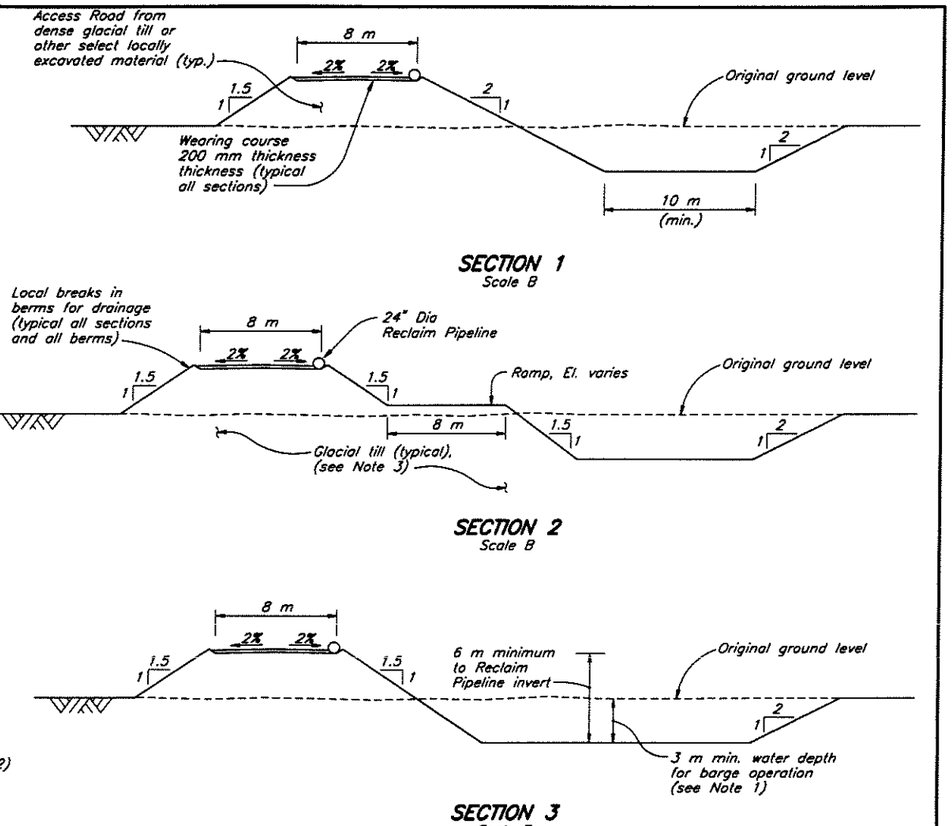

SECTION 1

Scale B

SECTION 2

Scale B

SECTION 3

Scale B

SECTION 4, 4/1625.218, 1/1625.222

Scale B

SECTION 5/1625.218, 2/1625.222

Scale B

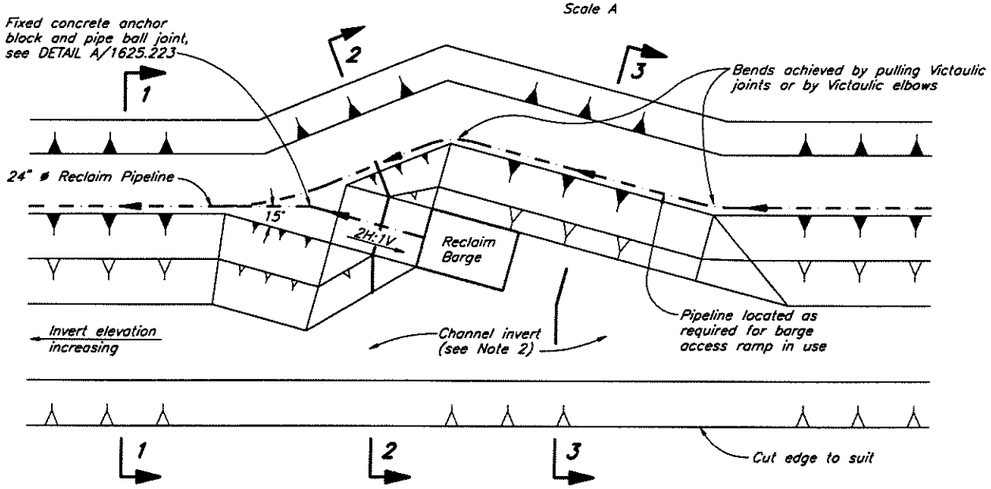

DETAIL A

TYPICAL BARGE ACCESS RAMP (LOCATED TO SUIT)

Scale C

NOTES:

1. Barge requires a minimum water depth of 3m for operation and can operate over a 3m range of water depth (See Dwg 1625.223)
2. Assumes water depth of 925m in TSF at startup. Optimum initial barge ramp location assumes access road and ball joint elevation of 928m and channel invert of 922m or lower. Uncertainties in initial water depth and need to relocate barge with each 3m rise in water level require additional access ramps upchannel and downchannel at 3m elevation increments. Alternatively, to allow for initial water levels lower than 925m, the initial access ramp could be redesigned with a significantly deeper channel, and longer access ramp to allow the initial location of the onshore ball joint to be fixed at an elevation appropriate to the level of the water in storage at startup. In the event that the initial ramp is moved down channel from the assumed location additional reclaim pipe will be required.
3. Compacted glacial till shall be placed along the barge channel excavation to meet basin liner requirements, as directed by the Engineer.

Scale C 10 0 20 40 m

Scale B 10 5 0 10 20 Metres

Scale A 100 50 0 100 200 Metres

DRG. NO.	DESCRIPTION
1626.223	TAILINGS STORAGE FACILITY – RECLAIM PIPELINE DETAILS
1626.222	TAILINGS STORAGE FACILITY – TAILINGS IMPOUNDMENT – TAILINGS AND RECLAIM PIPEWORK PLAN

REFERENCE DRAWINGS

REV.	DATE	DESCRIPTION	APPROVED
0	JULY 15/96	ISSUED FOR CONSTRUCTION	DB

REVISIONS

KNIGHT-PIESOLD LIMITED
CONSULTING ENGINEERS – VANCOUVER, B.C.

REGISTERED PROFESSIONAL ENGINEER OF H. P. DEW BRITISH COLUMBIA

DESIGNED	HPD
DRAWN	NSD
CHECKED	DB
APPROVED	DB

IMPERIAL METALS CORPORATION

MT. POLLEY PROJECT

TAILINGS STORAGE FACILITY
RECLAIM BARGE CHANNEL
EXCAVATION DETAILS

DATE JULY 15, 1996 | SCALE AS SHOWN | DRG. NO. 1625.206 | REV. 0

CAD FILE: 1625/051/051 1:2000 Plot 1=2 STD.1 July 11, 1996

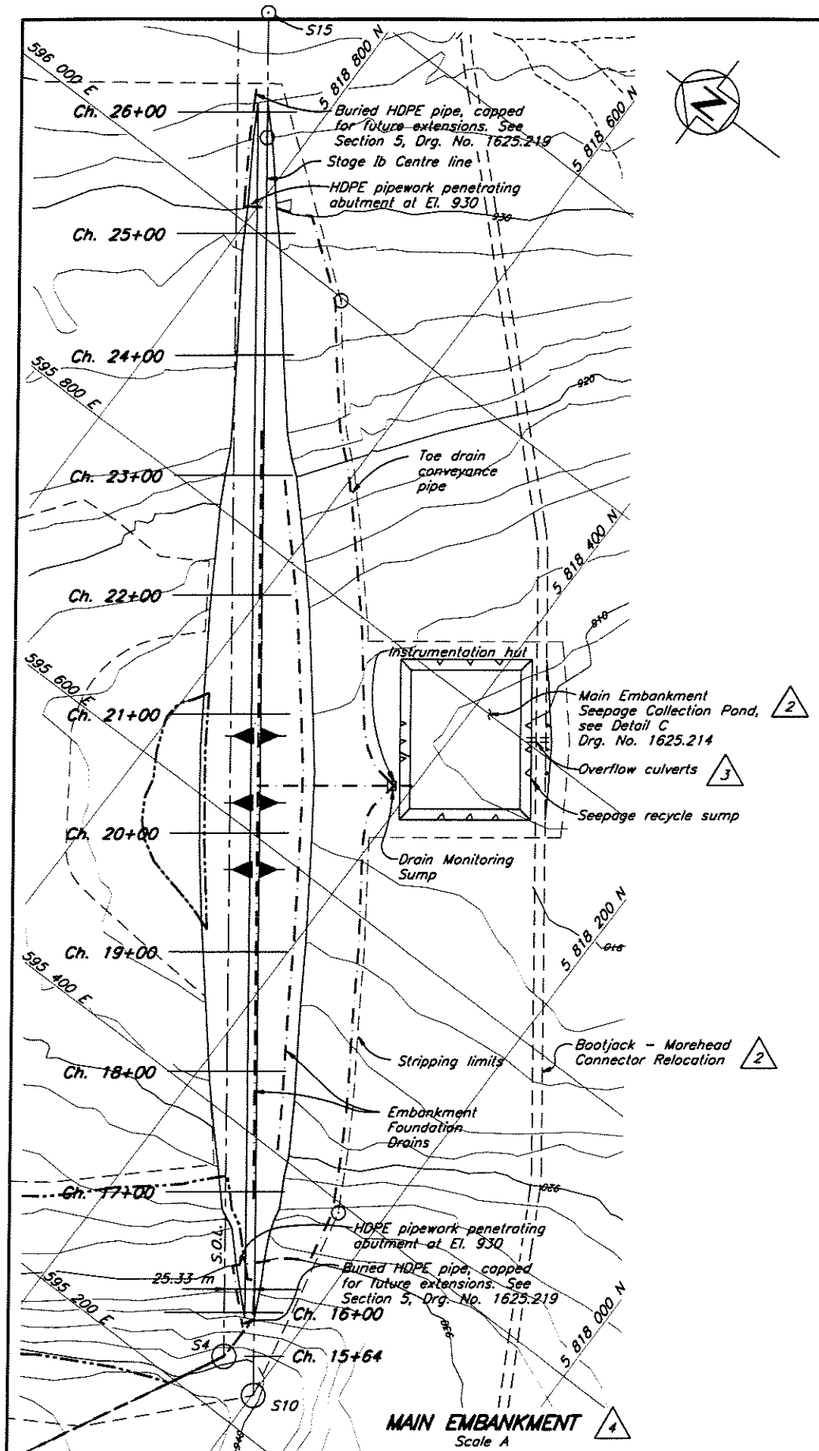

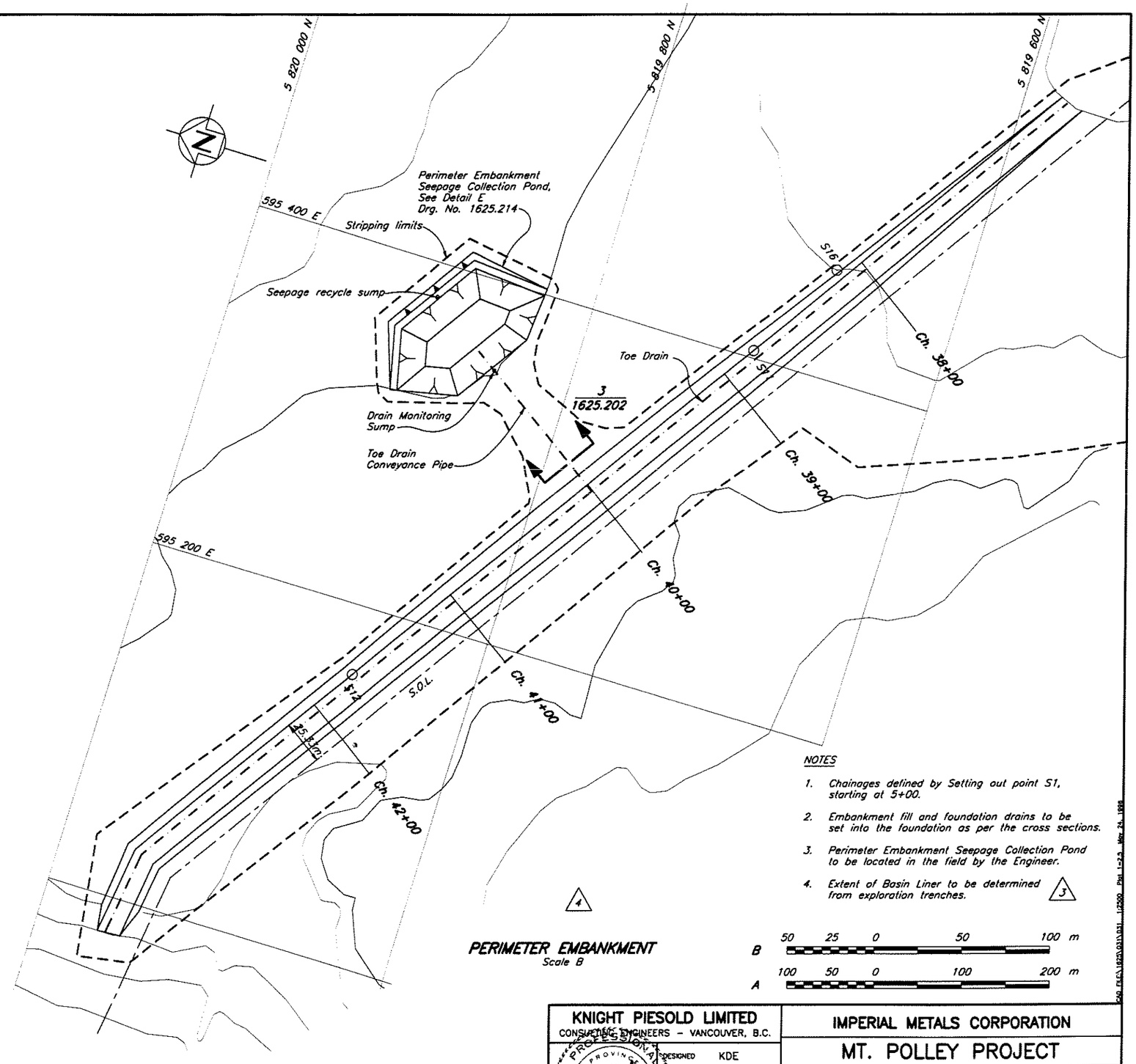

NOTES

1. Chainages defined by Setting out point S1, starting at 5+00.
2. Embankment fill and foundation drains to be set into the foundation as per the cross sections.
3. Perimeter Embankment Seepage Collection Pond to be located in the field by the Engineer.
4. Extent of Basin Liner to be determined from exploration trenches.

B 50 25 0 50 100 m

A 100 50 0 100 200 m

DRG. NO.	DESCRIPTION
1625.202	TAILINGS STORAGE FACILITY – FOUNDATION PREPARATION AND BASIN LINER – SECTIONS AND DETAILS
1625.214	TAILINGS STORAGE FACILITY – SEDIMENT CONTROL AND SEEPAGE COLLECTION – SECTIONS AND DETAILS

REFERENCE DRAWINGS

REV.	DATE	DESCRIPTION	APPROVED
4	MAY 24/95	ISSUED FOR CONSTRUCTION	KJB

REVISIONS

REV.	DATE	DESCRIPTION	APPROVED
3	APR 1/96	OVERFLOW CULVERTS ADDED	
2	MAR 25/96	UPDATE ROADS AND DRAINS	
1	JULY 27/95	BASIN LINER AND DRAINAGE REVISED	
0	JUNE 2/95	ISSUED FOR TENDER	

REVISIONS

KNIGHT PIESOLD LIMITED
CONSULTING ENGINEERS – VANCOUVER, B.C.

PROFESSIONAL ENGINEER – PROVINCE OF BRITISH COLUMBIA – K.D. KLEMMEE

DESIGNED	KDE
DRAWN	RDT
CHECKED	KDE
APPROVED	KJB

IMPERIAL METALS CORPORATION

MT. POLLEY PROJECT

TAILINGS STORAGE FACILITY
MAIN AND PERIMETER EMBANKMENTS
PLAN

DATE JUNE 2, 1995 | SCALE AS SHOWN | DRG. NO. 510-14-01-1625.210 | REV. 4

ZONE	MATERIAL TYPE	PLACEMENT AND COMPACTION REQUIREMENTS
Blanket/Toe Drain	Filter sand	Placed and spread in maximum 1.0 m thick layers. Vibratory compaction as directed by the Engineer.
Foundation Drain	Drain Gravel	Placed and compacted as shown on the Drawings
S	Glacial till	Placed, moisture conditioned and spread in maximum 300 mm thick layers (after compaction). Vibratory compaction to 95% of modified proctor maximum dry density or as approved by the Engineer.
B	Glacial till	Placed, moisture conditioned and spread in maximum 600 mm thick layers (after compaction). Vibratory compaction to 90% of modified proctor maximum dry density or as approved by the Engineer.

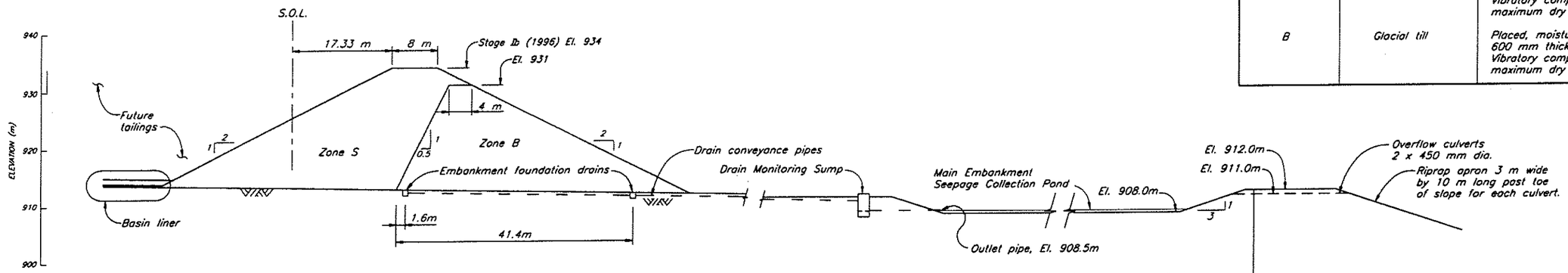

MAIN EMBANKMENT

Scale A

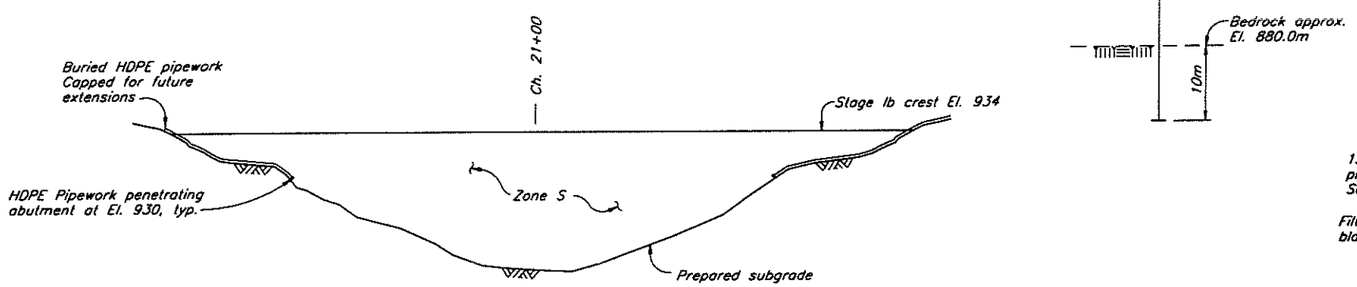

U/S VIEW OF MAIN EMBANKMENT

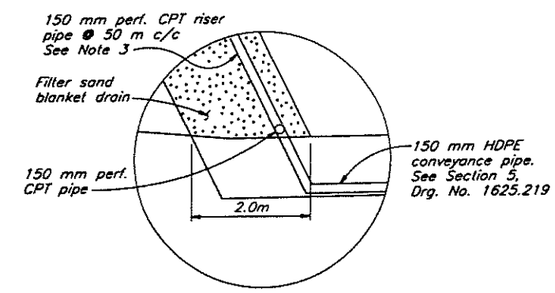

DETAIL C
PERIMETER EMBANKMENT DRAIN

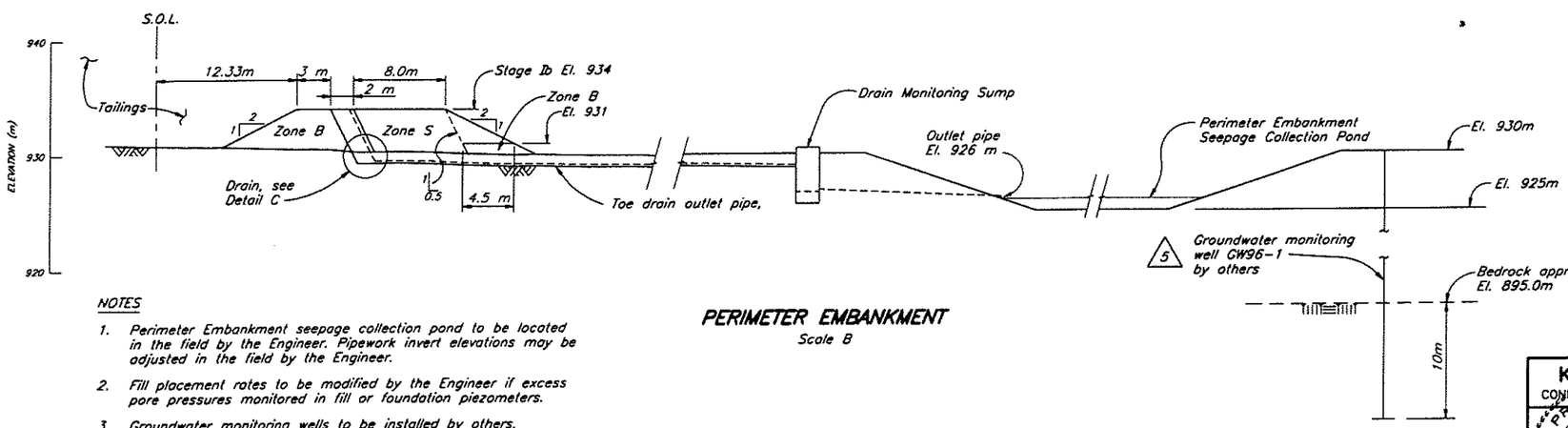

PERIMETER EMBANKMENT

Scale B

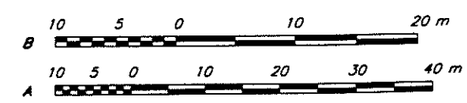

NOTES

1. Perimeter Embankment seepage collection pond to be located in the field by the Engineer. Pipework invert elevations may be adjusted in the field by the Engineer.
2. Fill placement rates to be modified by the Engineer if excess pore pressures monitored in fill or foundation piezometers.
3. Groundwater monitoring wells to be installed by others.

DRG. NO.	DESCRIPTION
REFERENCE DRAWINGS	

REV.	DATE	DESCRIPTION	APPROVED
5	MAY 28/96	ISSUED FOR CONSTRUCTION	KJB
4	APR 19/96	EMBANKMENT EROSION PROTECTION	
3	APR 11/96	RE-ISSUED FOR TENDER	
REVISIONS			

REV.	DATE	DESCRIPTION	APPROVED
2	APR 1/96	OVERFLOW CULVERTS ADDED	
1	MAR 22/96	UPDATE DRAINAGE	
0	JUNE 2/95	ISSUED FOR TENDER	
REVISIONS			

KNIGHT PIESOLD LIMITED
CONSULTING ENGINEERS – VANCOUVER, B.C.

PROFESSIONAL ENGINEER — PROVINCE OF BRITISH COLUMBIA — K. D. E. EVANS

DESIGNED	KDE
DRAWN	WAL/VT
CHECKED	KDE
APPROVED	KJB
DATE	JUNE 2, 1995

IMPERIAL METALS CORPORATION

MT. POLLEY PROJECT

TAILINGS STORAGE FACILITY
TAILINGS EMBANKMENT
SECTIONS AND DETAILS

SCALE AS SHOWN | DRG. NO. 510-14-02-1625.211 | REV. 5

CAD FILE: \1625\021\021 1:500 Plot 1=0.5 May 24, 1996

UNIFIED SOIL CLASSIFICATION SYSTEM

PROJECT: *ZONE – S AND B*

MATERIAL – GLACIAL TILL

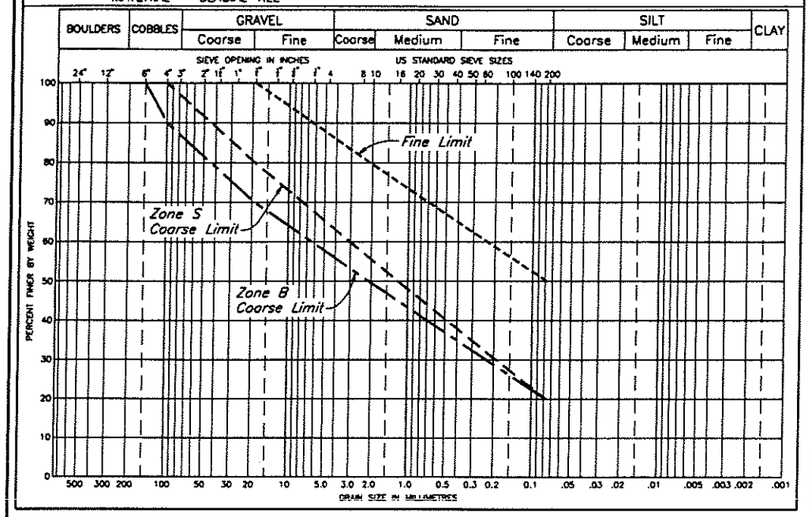

UNIFIED SOIL CLASSIFICATION SYSTEM

PROJECT: *ZONE – TOE DRAIN*

MATERIAL – FILTER SAND

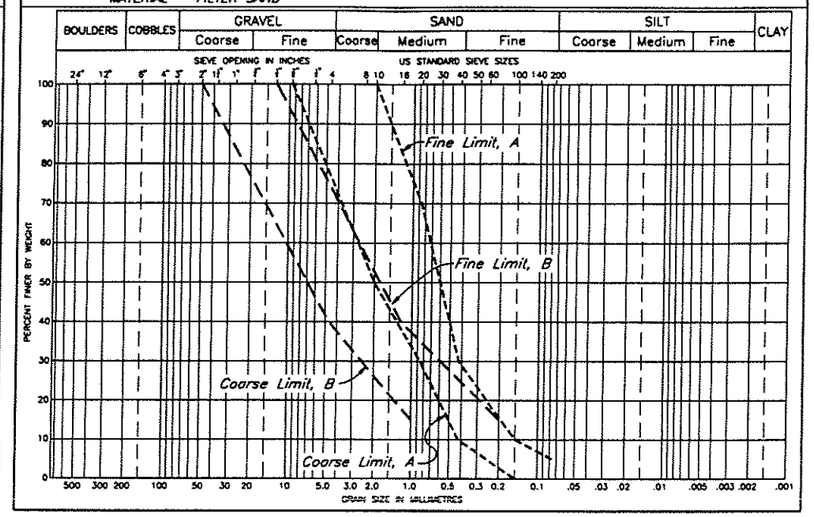

UNIFIED SOIL CLASSIFICATION SYSTEM

PROJECT: *ZONE – PIPE SURROUND*

MATERIAL – DRAIN GRAVEL

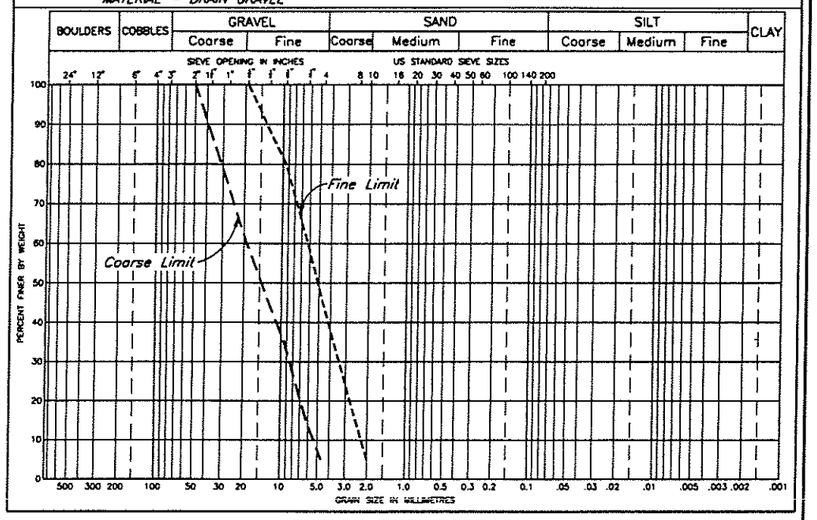

UNIFIED SOIL CLASSIFICATION SYSTEM

PROJECT: *ZONE – BASIN LINER*

MATERIAL – GLACIAL TILL

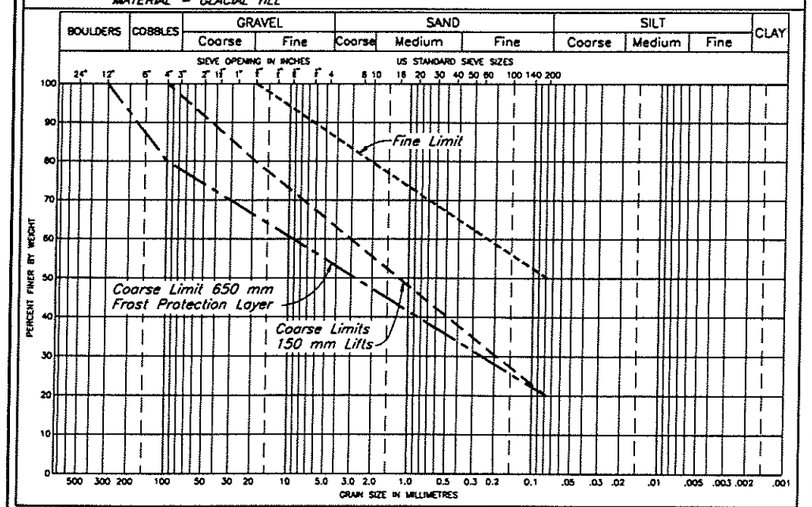

UNIFIED SOIL CLASSIFICATION SYSTEM

PROJECT: *ZONE – DITCH EROSION PROTECTION*

MATERIAL – RIPRAP

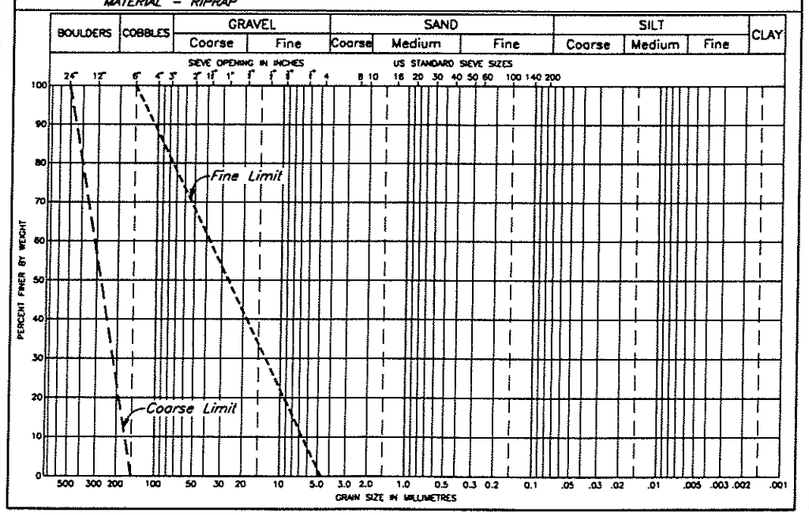

UNIFIED SOIL CLASSIFICATION SYSTEM

PROJECT: *ZONE – ROAD SURFACING*

MATERIAL – WEARING COURSE

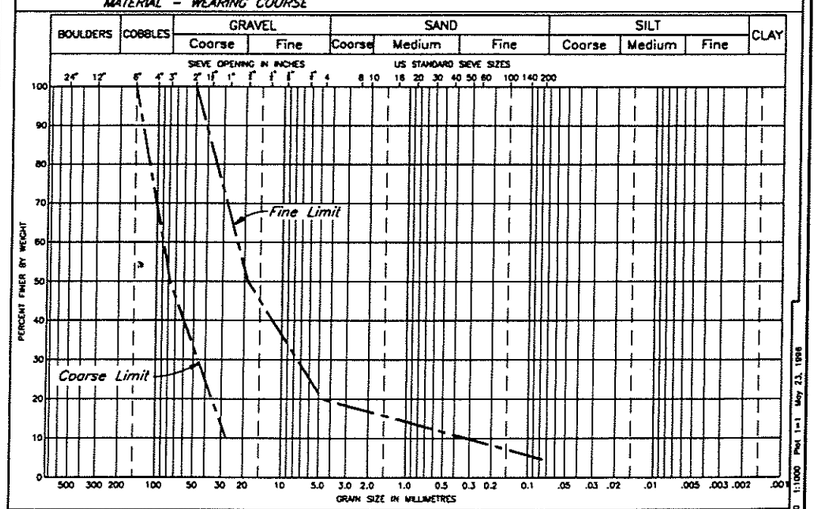

NOTES

1. *No more than 10% of Zone S material shall be coarser than the Zone S Coarse Limit and such material shall be finer than the Zone B coarse limit. Zone S material which has a gradation between the Zone S and B coarse limits shall be well spaced out and shall not form continuous layers or sizeable lenses.*

2. *For Filter sand, the portion passing the No. 40 sieve must have a plasticity index (PI) of zero.*

DRG. NO.	DESCRIPTION

REFERENCE DRAWINGS

REV.	DATE	DESCRIPTION	APPROVED

REVISIONS

REV.	DATE	DESCRIPTION	APPROVED
1	MAY 24/96	ISSUED FOR CONSTRUCTION	KJB
0	JUNE 2/95	ISSUED FOR TENDER	

REVISIONS

KNIGHT PIESOLD LIMITED
CONSULTING ENGINEERS – VANCOUVER, B.C.

PROFESSIONAL ENGINEER – PROVINCE OF BRITISH COLUMBIA – K. D. K. EDWARDS

DESIGNED	KDE
DRAWN	RDT
CHECKED	KDE
APPROVED	KJB

DATE JUNE 2, 1995 | SCALE AS SHOWN | DRG. NO. 510-14-03-1625.212 | REV. 1

IMPERIAL METALS CORPORATION

MT. POLLEY PROJECT

TAILINGS STORAGE FACILITY
MATERIAL SPECIFICATIONS

CAD FILE:\1625\035\030 1:1000 PAGE 1-1 May 23, 1996

596 000 E
5 819 000 N
596 200 E
5 818 600 N
596 400 E
5 818 200 N
Overburden stockpile
930
Bootjack–Morehead Connector relocation
2
920
910
595 800 E
Instrumentation Monitoring Hut
Main Embankment Seepage Collection Pond
2
Overflow culverts, See Drg. No. 1625.211
3
5 818 000 N
1/1625.214
GW96–3
Seepage recycle sump, see Detail A
Primary sediment control behind Main Embankment after commencement of till placement
El. 918
1/1625.214
6
3
3
Drain Monitoring Sump
Seepage recycle pipeline by Others
Reclaim barge channel
595 200 E
Approx. limits of Basin Liner. See Note 4
6
2/1625.214
920
910

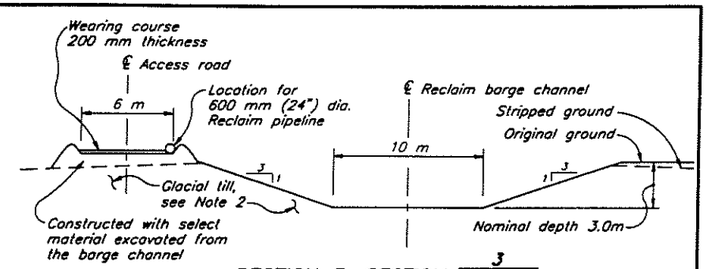

SECTION 3, SECTION 3/1625.218
RECLAIM BARGE CHANNEL
Scale B

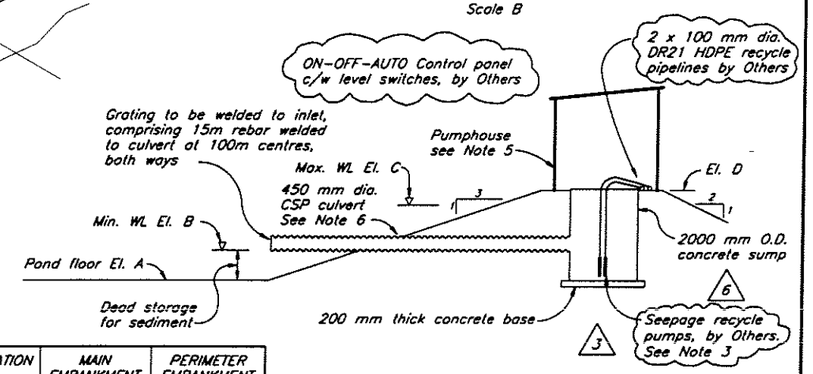

ELEVATION	MAIN EMBANKMENT	PERIMETER EMBANKMENT
A	908.0	925.0
B	908.5	926.0
C	909.5	927.5
D	911.0	930.0

DETAIL A
SEEPAGE COLLECTION AND RECYCLE SYSTEM
NTS

NOTE

1. Test pits indicate 4m thickness of till in proposed location of barge channel. Additional test pits will be required to confirm adequate thickness of till to finalize barge channel alignment.
2. Compacted glacial till shall be placed along the barge channel excavation to meet basin liner requirements as directed by the Engineer.
3. (3) Seepage recycle pumps to be 2 – 100 mm electric submersible pumps, discharging to 2 – 100 mm pipelines extended up D/S face of tailings embankment. Pump sump to be fully enclosed with an insulated building c/w venting and I beam suitable for raising the pumps.
4. (3) Extent of basin liner to be determined from exploration trenches.
5. Pumphouse by C.S.F.M. Engineering. Ltd. see Drg. No. 903
6. Penetration of concrete sump by CSP culvert to be water tight.

Scale B 10 5 0 10 20 m
Scale A 100 50 0 100 200 m

DRG. NO.	DESCRIPTION
1625.214	SEDIMENT CONTROL AND SEEPAGE COLLECTION – SECTIONS AND DETAILS

REFERENCE DRAWINGS

REV.	DATE	DESCRIPTION	APPROVED
6	MAY 24/96	ISSUED FOR CONSTRUCTION	KJB
5	APR 26/96	CHANGE NOTE	

REVISIONS

REV.	DATE	DESCRIPTION	APPROVED
4	APR 19/96	RECLAIM CHANNEL ACCESS ROAD	
3	APR 1/96	CULVERTS & SEEPAGE DETAILS ADDED	
2	MAR 25/96	UPDATE ROAD & DRAINAGE	
1	JUL 27/95	BASIN LINER REVISED	
0	JUN 2/95	ISSUED FOR TENDER	

REVISIONS

KNIGHT PIESOLD LIMITED
CONSULTING ENGINEERS – VANCOUVER, B.C.

PROFESSIONAL ENGINEER — PROVINCE OF BRITISH COLUMBIA — K. D. H. FARMER

DESIGNED	KDE
DRAWN	RDT/VY
CHECKED	MDB
APPROVED	KJB

IMPERIAL METALS CORPORATION

MT. POLLEY PROJECT

TAILINGS STORAGE FACILITY SEDIMENT CONTROL AND SEEPAGE COLLECTION

DATE JUNE 2, 1995 | SCALE AS SHOWN | DRG. NO. 510–19–01–1625.213 | REV. 6

CAD FILE:\1625\1625.022 1:2500 Plot 1:2.5 Mar 26, 1996

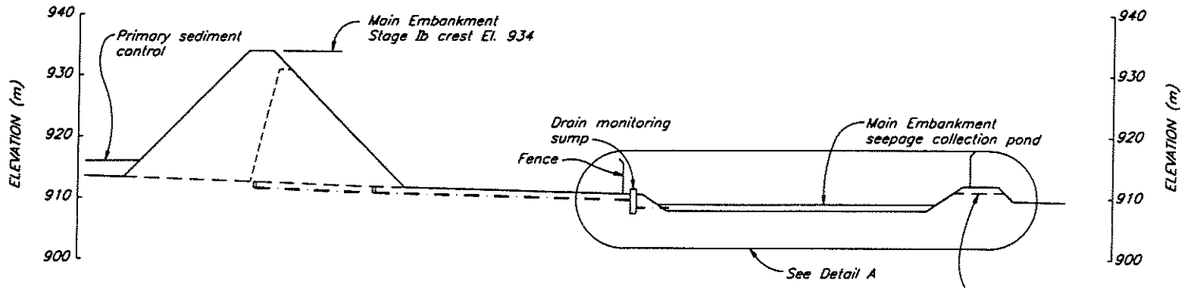

SECTION 1/1625.213
SEEPAGE PROFILE
Horiz. Scale C, Vert. Scale A

3

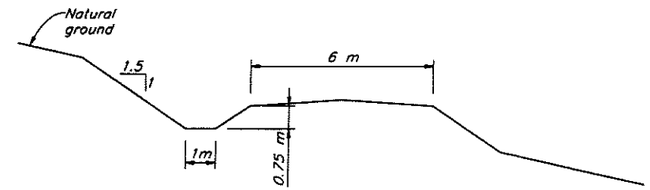

SECTION 2/1625.213
TYPICAL SECTION FOR BOOTJACK-MOREHEAD CONNECTOR RELOCATION
Scale B

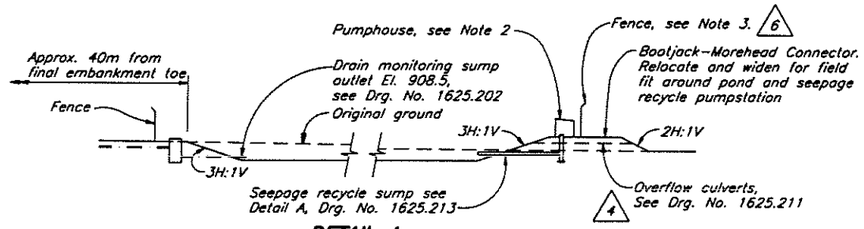

DETAIL A
MAIN EMBANKMENT SEEPAGE COLLECTION POND
Scale A

3

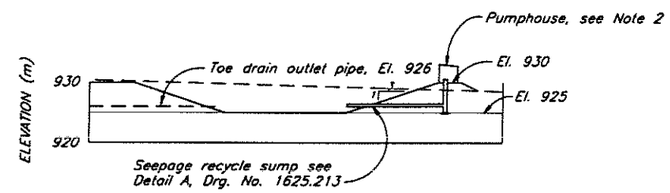

DETAIL E/1625.210
PERIMETER EMBANKMENT SEEPAGE COLLECTION POND
Scale A

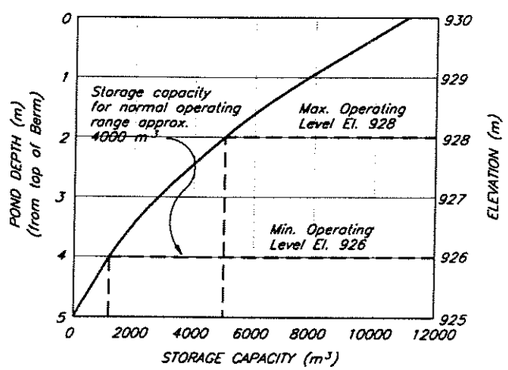

PERIMETER EMBANKMENT SEEPAGE COLLECTION POND
DEPTH/CAPACITY RELATIONSHIP

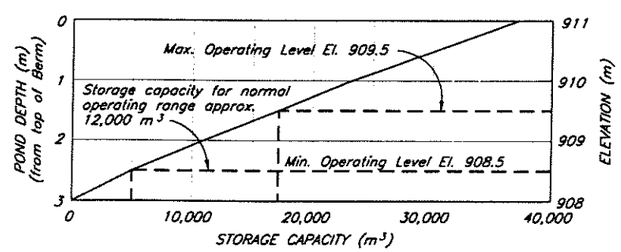

MAIN EMBANKMENT SEEPAGE COLLECTION POND
DEPTH/CAPACITY RELATIONSHIP

NOTES

1. Perimeter embankment seepage collection pond will be sized to have a min. live storage capacity of approx. 4000 m³.
2. Pumphouse by C.S.F.M. Engineering Ltd. see Drg. No. 903
3. Fence to be six feet high, chain link with 2 inch galvanized posts and two six foot wide access gates.

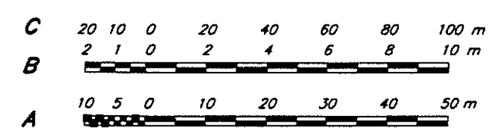

CAD FILE: \1625\023\023 1:500 Plot 1=0.5 JUNE 4, 1996

* "SIGNATURES AND PROFESSIONAL SEAL ON REV.5 ORIGINAL"

DRG. NO.	DESCRIPTION
1625.213	TAILINGS STORAGE FACILITY – SEDIMENT CONTROL AND SEEPAGE COLLECTION
1625.202	TAILINGS STORAGE FACILITY – FOUNDATION PREPARATION AND BASIN LINER – SECTIONS AND DETAILS

REFERENCE DRAWINGS

REV.	DATE	DESCRIPTION	APPROVED
6	JUN 6/96	FENCE NOTE ADDED	LJB
5	MAY 24/96	RE-ISSUED FOR CONSTRUCTION	

REVISIONS

REV.	DATE	DESCRIPTION	APPROVED
4	APR 1/96	OVERFLOW CULVERTS ADDED	
3	MAR 22/96	UPDATE DRAINAGE AND ROAD	
2	SEPT. 5/95	ISSUED FOR CONSTRUCTION	
1	JULY 27/95	RIPRAP APRON ADDED	
0	JUNE 2/95	ISSUED FOR TENDER	

REVISIONS

KNIGHT PIESOLD LIMITED
CONSULTING ENGINEERS – VANCOUVER, B.C.

*

DESIGNED	KDE
DRAWN	VY/NSD
CHECKED	*
APPROVED	*

IMPERIAL METALS CORPORATION

MT. POLLEY PROJECT

TAILINGS STORAGE FACILITY
SEDIMENT CONTROL AND SEEPAGE COLLECTION – SECTIONS AND DETAILS

DATE JUNE 2, 1995 | SCALE AS SHOWN | DRG. NO. 510-19-02-1625.214 | REV. 6

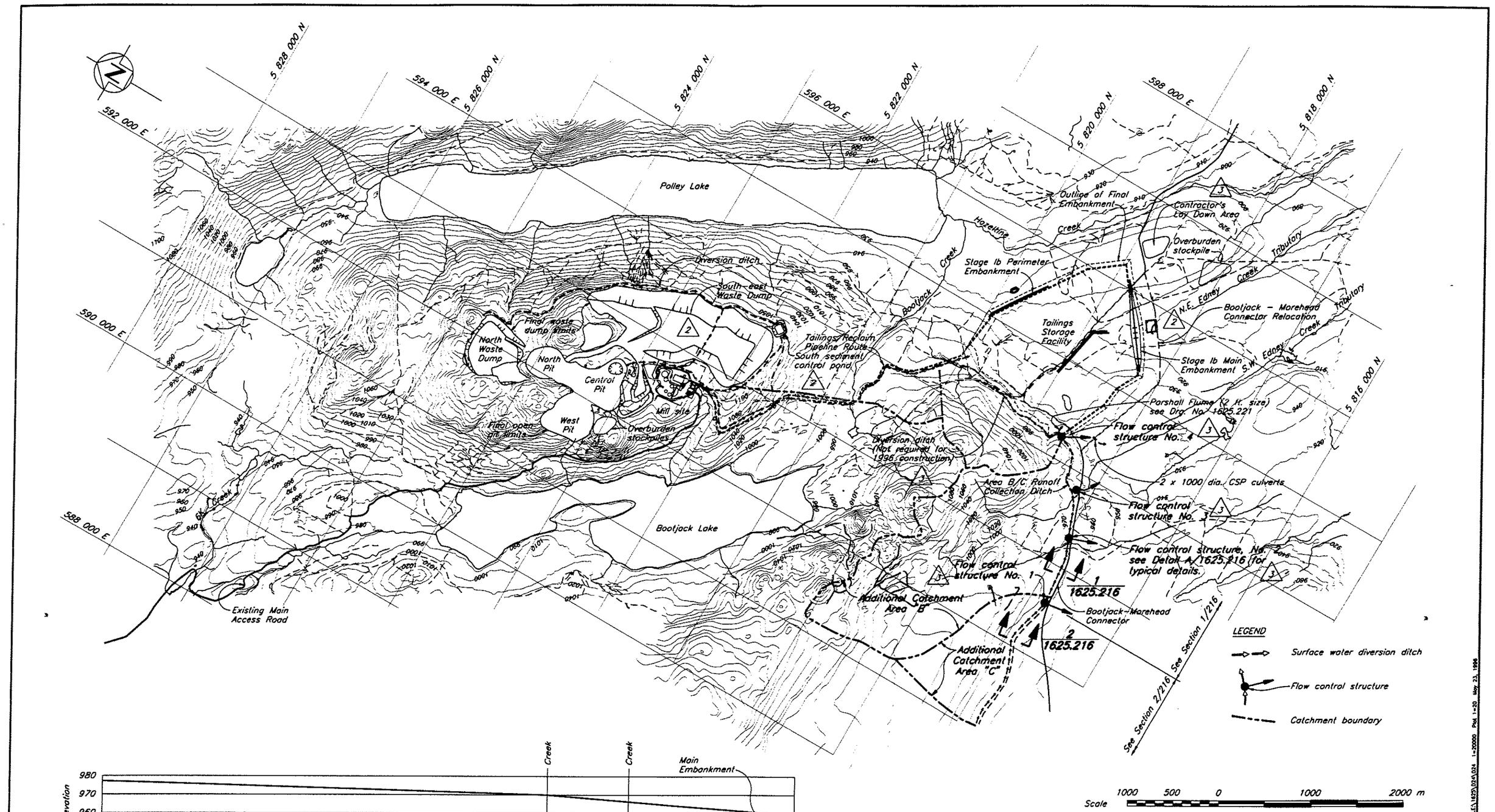

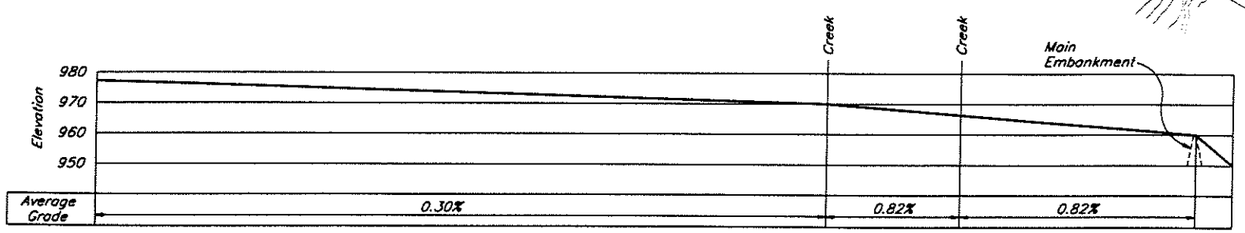

AREA B/C RUNOFF COLLECTION DITCH PROFILE

DRG. NO.	DESCRIPTION
1625.216	TAILINGS STORAGE FACILITY – SURFACE WATER CONTROL – SECTIONS AND DETAILS

REFERENCE DRAWINGS

REV.	DATE	DESCRIPTION	APPROVED
4	MAY 24/96	ISSUED FOR CONSTRUCTION	KJB

REVISIONS

REV.	DATE	DESCRIPTION	APPROVED
3	APR 1/96	REVISED MILLSITE	
2	MAR 25/96	UPDATE OPEN PITS, WASTE DUMP, SITE DRAINAGE & ROADS	
1	JULY 27/95	SECTION LIMITS ADDED	
0	JUNE 2/95	ISSUED FOR TENDER	

REVISIONS

KNIGHT PIESOLD LIMITED
CONSULTING ENGINEERS – VANCOUVER, B.C.

PROFESSIONAL ENGINEER – PROVINCE OF BRITISH COLUMBIA – K. D. K. EMBLEE

DESIGNED	MBS
DRAWN	W.A. Lahoda
CHECKED	MDB
APPROVED	KJB

IMPERIAL METALS CORPORATION

MT. POLLEY PROJECT

TAILINGS STORAGE FACILITY
SURFACE WATER CONTROL
PLAN AND PROFILE

DATE JUNE 2, 1995 | SCALE AS SHOWN | DRG. NO. 510-19-03-1625.215 | REV. 4

CAD FILE: \1625\024\024 1=20000 Plot 1=20 May 23, 1996

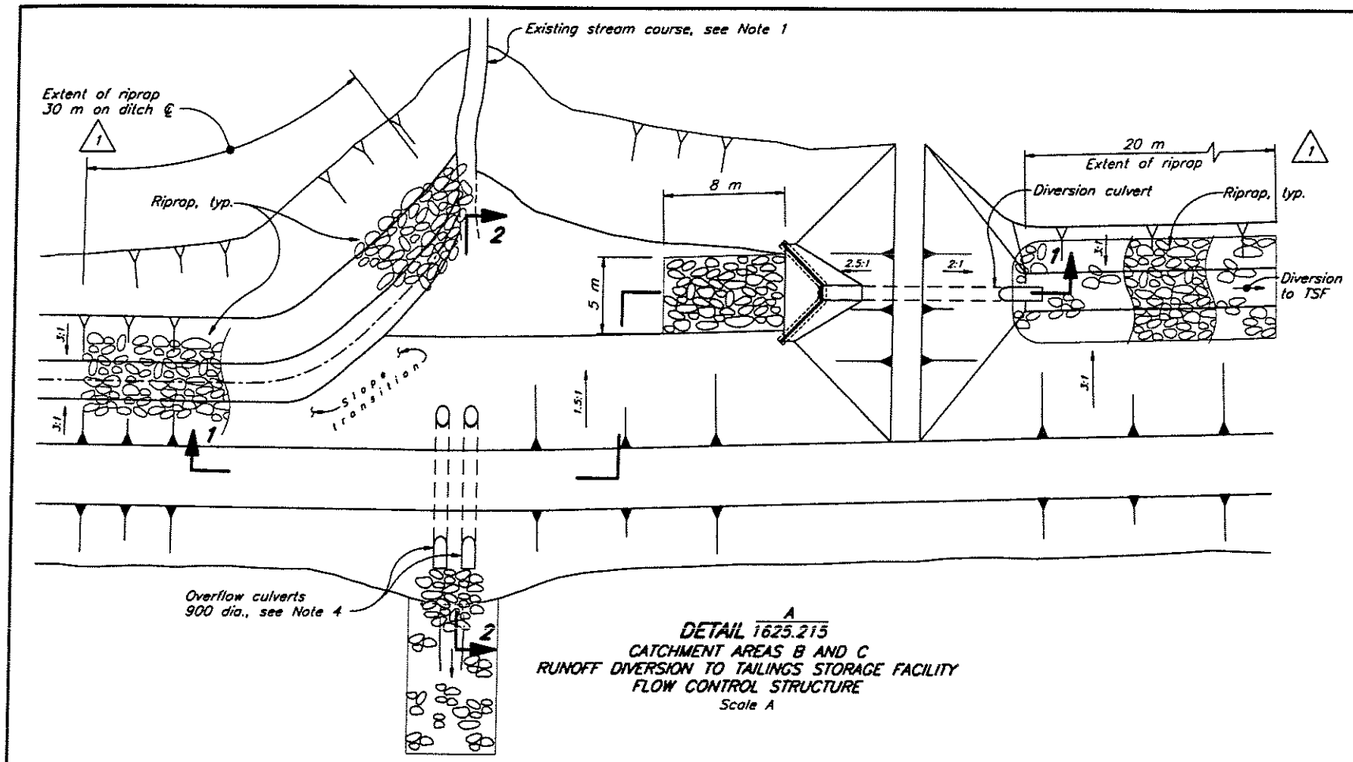

DETAIL A/1625.215
CATCHMENT AREAS B AND C
RUNOFF DIVERSION TO TAILINGS STORAGE FACILITY
FLOW CONTROL STRUCTURE
Scale A

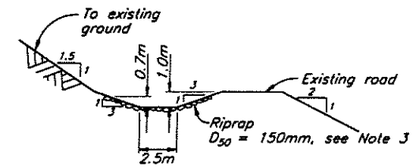

SECTION 1/1625.215
Scale A

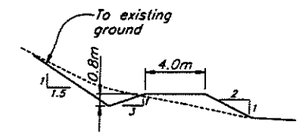

SECTION 2/1625.215
Scale A

NOTES

1. Detailed setting out of Area B and C runoff collection ditch and flow control structures may be adjusted by the Engineer to suit detailed topography of existing stream courses.
2. Area B and C runoff collection ditches designed for 50 yr. precipitation event peak flows.
3. Additional riprap shall be placed as directed by the Engineer based on ground conditions and local profile of ditches.
4. Flow control structures No. 1, 2 and 3 have 1 overflow culvert, No. 4 has 2 overflow culverts.
5. For flow control structure concrete or alternative details, see Drg. No. 1625.217.

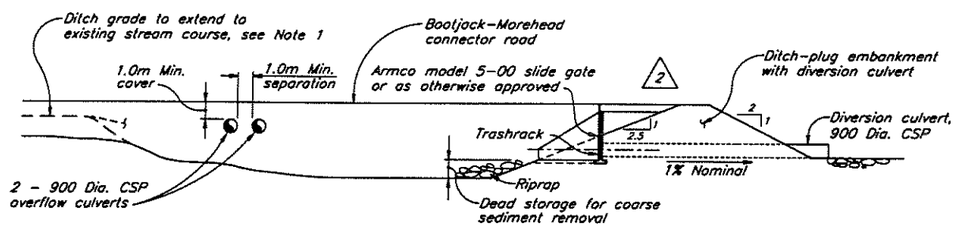

SECTION 1
Scale A

NOTE
Elevation difference affects quantity of diverted flow as shown on depth-discharge curves on this Drawing.

DEPTH-DISCHARGE CURVES

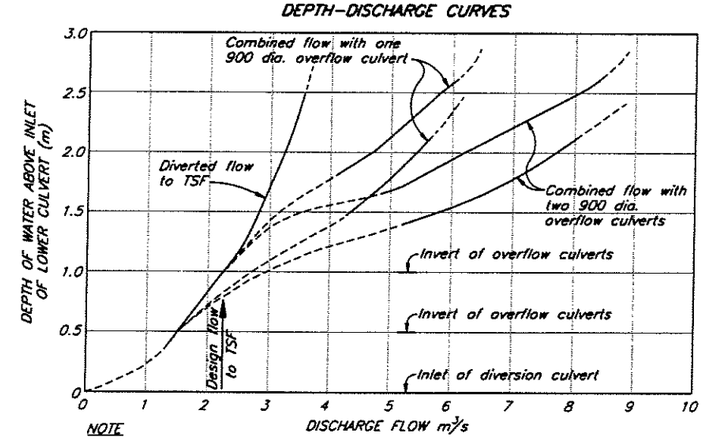

NOTE
All culverts are 900 dia. (36"Ø) CMP

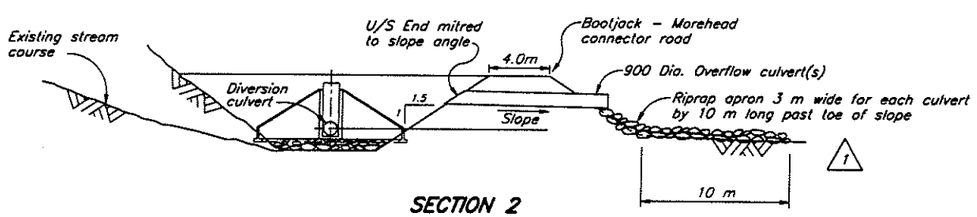

SECTION 2
Scale A

A 4 2 0 10 20 m

DRG. NO.	DESCRIPTION
1625.217	TAILINGS STORAGE FACILITY - SURFACE WATER CONTROL - FLOW CONTROL STRUCTURE - CONCRETE DETAILS
1625.215	TAILINGS STORAGE FACILITY - SURFACE WATER CONTROL - PLAN AND PROFILE

REFERENCE DRAWINGS

REV.	DATE	DESCRIPTION	APPROVED

REVISIONS

REV.	DATE	DESCRIPTION	APPROVED
3	MAY 24/96	ISSUED FOR CONSTRUCTION	KDB
2	APR 1/96	NOTES CHANGED	
1	JULY 27/95	EXTENT OF RIPRAP DEFINED, SECTIONS REVISED	
0	JUNE 2/95	ISSUED FOR TENDER	

REVISIONS

KNIGHT PIESOLD LIMITED
CONSULTING ENGINEERS - VANCOUVER, B.C.

PROFESSIONAL ENGINEER — PROVINCE OF BRITISH COLUMBIA — K.D. BRAMMER

DESIGNED	MBS
DRAWN	W.A. Lahoda
CHECKED	MDB
APPROVED	KDB

DATE JUNE 2, 1995 | SCALE AS SHOWN | DRG. NO. 510-19-04-1625.216 | REV. 3

IMPERIAL METALS CORPORATION

MT. POLLEY PROJECT

TAILINGS STORAGE FACILITY
SURFACE WATER CONTROL
SECTIONS AND DETAILS

CAD FILE: 1625\025\025 1:100 Plot 1=0.1 May 24, 1996

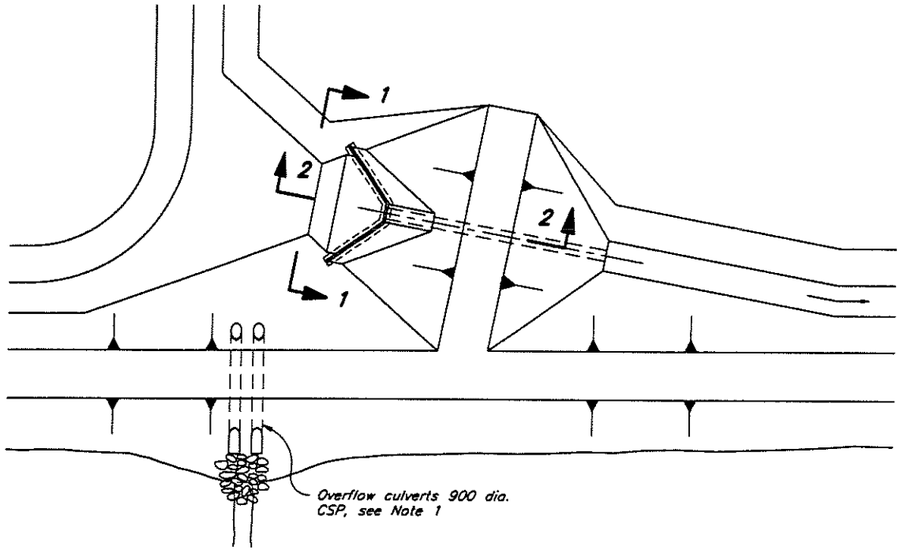

KEY PLAN
Scale A

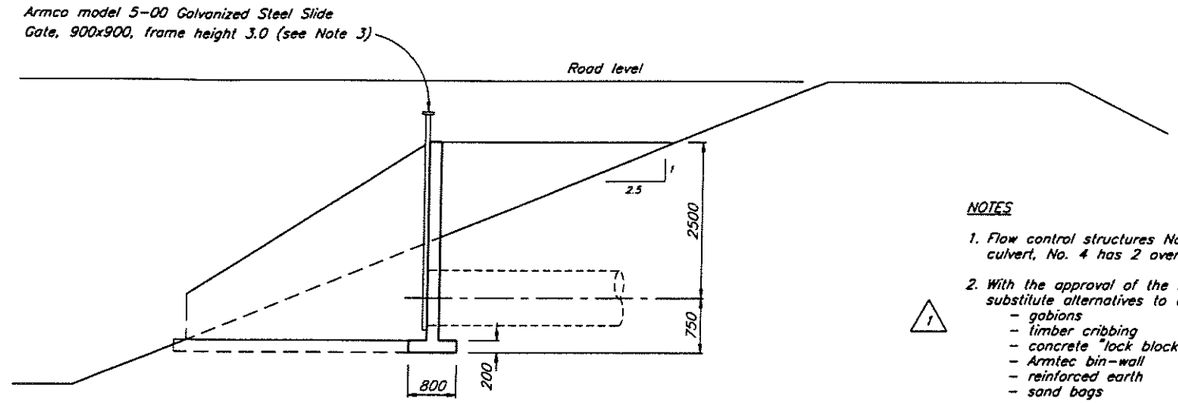

SECTION 2
Scale D

NOTES

1. Flow control structures No. 1, 2 and 3 have 1 overflow culvert, No. 4 has 2 overflow culverts.
2. With the approval of the Engineer the Contractor may substitute alternatives to concrete construction including:
   - gabions
   - timber cribbing
   - concrete "lock blocks"
   - Armtec bin-wall
   - reinforced earth
   - sand bags
3. Contractor may consider Armtec Model 101C slide gate direct mounted to the culvert.

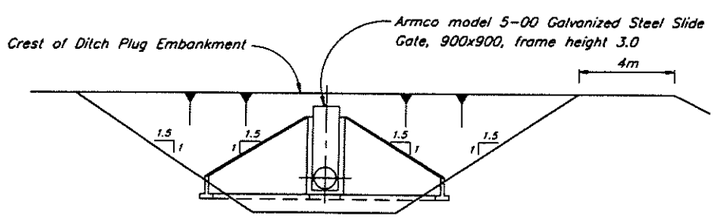

SECTION 1 – FRONT ELEVATION
Scale C

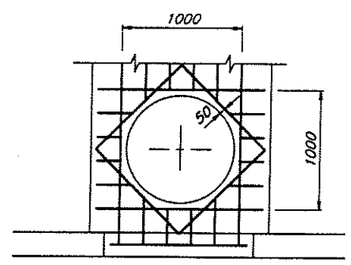

DETAIL A
CULVERT OPENING REINFORCEMENT
Scale B

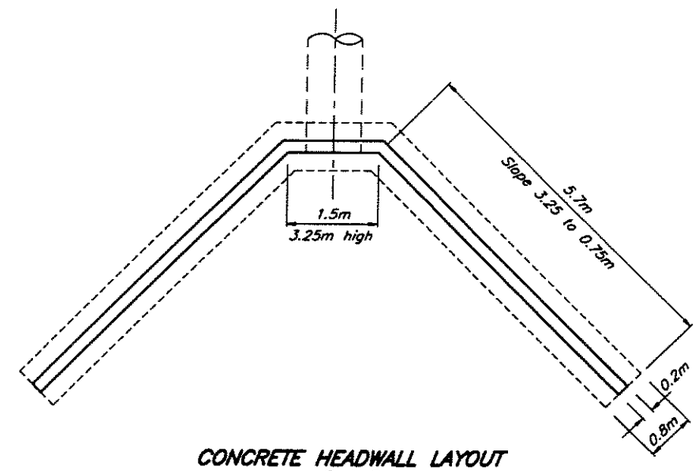

CONCRETE HEADWALL LAYOUT
Scale D

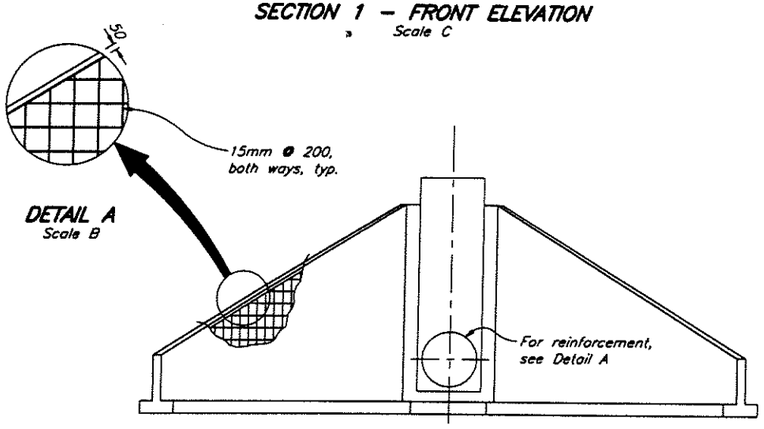

DETAIL A
Scale B

WALL REINFORCEMENT (see Note 2)
Scale D

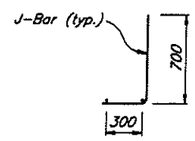

FOOTING REINFORCEMENT
Scale B

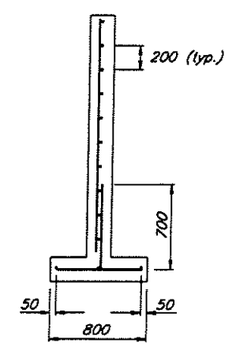

WALL REINFORCEMENT
Scale B

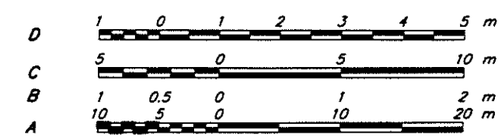

CAD FILE: 1625\035\035 1:250 Plot 1=0.25 May 24, 1996

DRG. NO.	DESCRIPTION
1625.216	TAILINGS STORAGE FACILITY – SURFACE WATER CONTROL – SECTIONS AND DETAILS

REFERENCE DRAWINGS

REV.	DATE	DESCRIPTION	APPROVED

REVISIONS

REV.	DATE	DESCRIPTION	APPROVED
2	MAY 24/96	ISSUED FOR CONSTRUCTION	KIB
1	APR 1/95	NOTES CHANGED	
0	JUNE 2/95	ISSUED FOR TENDER	

REVISIONS

KNIGHT PIESOLD LIMITED
CONSULTING ENGINEERS – VANCOUVER, B.C.

PROFESSIONAL ENGINEER – PROVINCE OF BRITISH COLUMBIA – K. D. KOVACREE

DESIGNED	MBS
DRAWN	RDT/VY
CHECKED	MDB
APPROVED	KIB

DATE JUNE 2, 1995 | SCALE AS SHOWN

IMPERIAL METALS CORPORATION

MT. POLLEY PROJECT

TAILINGS STORAGE FACILITY
SURFACE WATER CONTROL
FLOW CONTROL STRUCTURES
CONCRETE DETAILS

DRG. NO. 510-19-05-1625.217 REV. 2

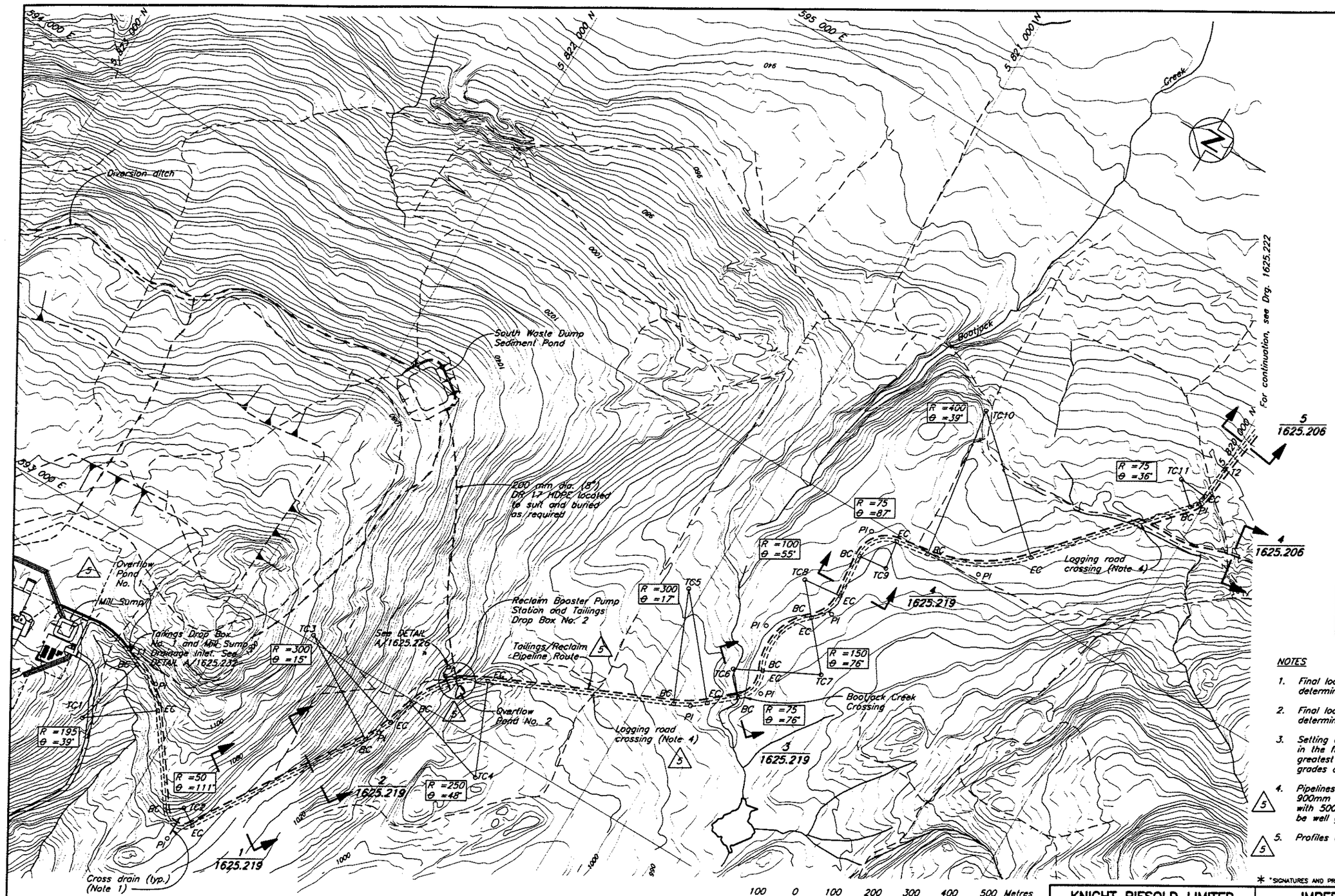

SETTING OUT POINTS (Note 8)		
Point	Northing	Easting
T1	Field locate	Field locate
TC1	5 822 212.426	592 528.348
BC	5 822 161.106	592 716.473
EC	5 822 054.012	592 642.057
PI	5 822 094.357	592 698.264
TC2	5 821 864.147	592 463.292
BC	5 821 904.766	592 434.135
EC	5 821 822.231	592 436.033
PI	5 821 862.111	592 374.711
TC3	5 821 802.714	593 016.314
BC	5 821 551.219	592 852.758
EC	5 821 517.947	592 921.933
PI	5 821 530.122	592 885.200
TC4	5 821 258.152	592 911.135
BC	5 821 495.458	592 989.786
EC	5 821 357.902	593 140.373
PI	5 821 460.320	593 095.808
TC5	5 821 034.980	593 608.059
BC	5 820 915.281	593 332.973
EC	5 820 841.176	593 379.061
PI	5 820 874.841	593 350.570
TC6	5 820 828.199	593 488.298
BC	5 820 779.748	593 431.048
EC	5 820 761.122	593 521.849
PI	5 820 734.752	593 469.130
TC7	5 820 626.968	593 588.951
BC	5 820 761.122	593 521.849
EC	5 820 724.705	593 702.739
PI	5 820 813.467	593 626.498
TC8	5 820 789.863	593 778.597
BC	5 820 724.705	593 702.739
EC	5 820 690.352	593 788.480
PI	5 820 685.206	593 736.666
TC9	5 820 626.991	593 909.389
BC	5 820 701.624	593 901.976
EC	5 820 638.300	593 983.531
PI	5 820 708.658	593 972.800
TC10	5 820 612.021	594 392.165
BC	5 820 551.708	593 996.739
EC	5 820 314.310	594 125.018
PI	5 820 410.028	594 018.349
TC11	5 820 083.239	594 494.822
BC	5 820 027.418	594 444.732
EC	5 820 008.600	594 487.469
PI	5 820 011.009	594 463.018

NOTES

1. Final location of cross drain culverts to be determined in the field by the Engineer.
2. Final location of Bootjack Creek crossing to be determined in the field by the Engineer.
3. Setting out points for roadway are to be adjusted in the field to achieve a cut/fill balance to the greatest extent possible and to avoid oversteep grades or low spots in pipeline.
4. Pipelines under logging roads to be sleeved in 900mm ø x 2mm minimum wall CSP culverts with 500mm minmum depth of cover. Backfill to be well graded and compacted sand and gravel.
5. Profiles and quantities moved to Drg. No. 1625.228.

* "SIGNATURES AND PROFESSIONAL SEAL ON REV.0 ORIGINAL"

Scale 100 0 100 200 300 400 500 Metres

DRG. NO.	DESCRIPTION
1625.206	TAILINGS STORAGE FACILITY – RECLAIM BARGE CHANNEL – EXCAVATION DETAILS
1625.219	TAILINGS STORAGE FACILITY – TAILINGS DISTRIBUTION AND RECLAIM SYSTEM – SECTIONS AND DETAILS
1625.222	TAILINGS STORAGE FACILITY – TAILINGS IMPOUNDMENT – TAILINGS AND RECLAIM PIPEWORK PLAN
1625.228	TAILINGS STORAGE FACILITY – TAILINGS DISTRIBUTION AND RECLAIM SYSTEM – PROFILES

REFERENCE DRAWINGS

REV.	DATE	DESCRIPTION	APPROVED

REVISIONS

REV.	DATE	DESCRIPTION	APPROVED
5	JULY 15/96	PIPELINES RELOCATED, SEE NOTE 5	CJB
4	MAY 24/96	ISSUED FOR CONSTRUCTION	
3	APR 19/95	NOTE ADDED	
2	APR 1/96	MILLSITE AND CONTROL POND REVISED	
1	MAR 25/96	RE-ISSUED FOR TENDER	
0	JUNE 2/95	ISSUED FOR TENDER	

REVISIONS

KNIGHT PIESOLD LIMITED
CONSULTING ENGINEERS – VANCOUVER, B.C.

*

DESIGNED	MBS
DRAWN	VY/RDT/NSD
CHECKED	*
APPROVED	*

IMPERIAL METALS CORPORATION

MT. POLLEY PROJECT

TAILINGS STORAGE FACILITY
TAILINGS DISTRIBUTION AND
RECLAIM SYSTEM – PLAN

DATE JUNE 2, 1995 | SCALE AS SHOWN | DRG. NO. 1625.218 | REV. 5

CAD FILE: \1625\028\028 1:5000 PM 1+0 STD.1 July 12, 1996

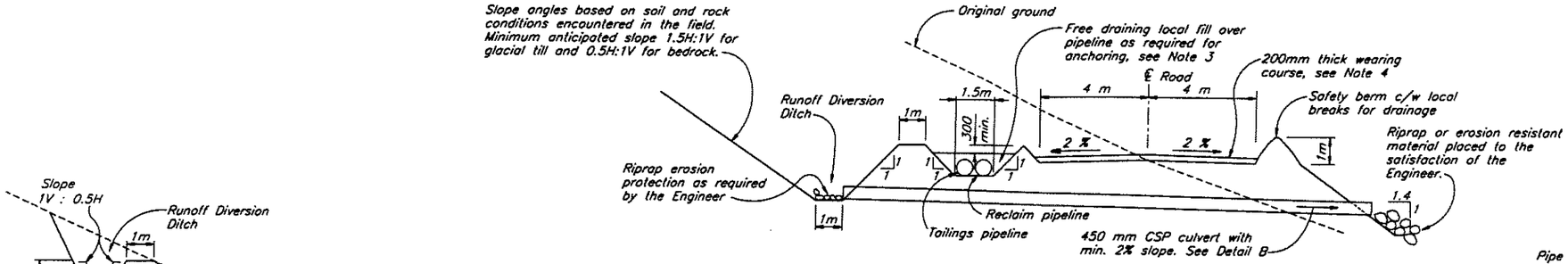

SECTION 2/1625.218 (5)

DIVERSION DITCH AND CROSS-DRAIN CULVERT FOR TAILINGS ACCESS ROAD

Scale B

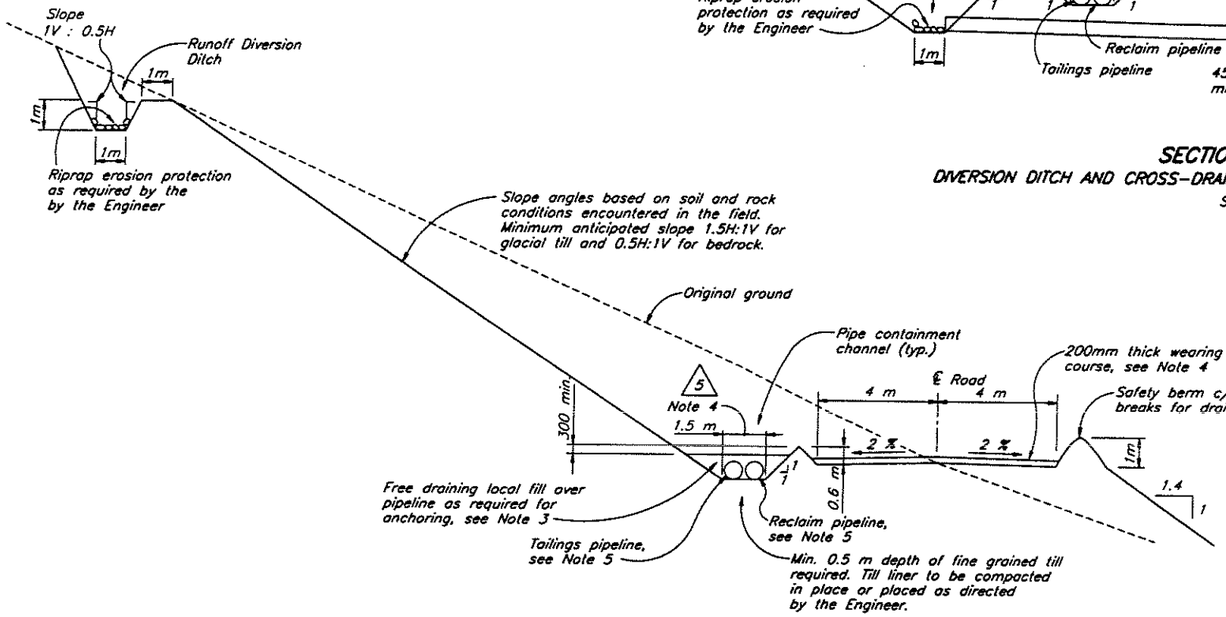

SECTION 1/1625.218 , 2/1625.232 , 1/1625.226 (5)

TAILINGS ACCESS ROAD WITH DIVERSION DITCH

Scale B

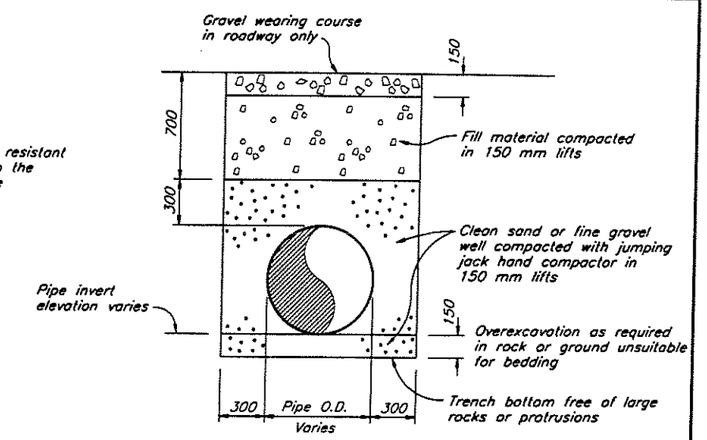

TYPICAL DETAIL FOR BURIED HDPE PIPE

NTS

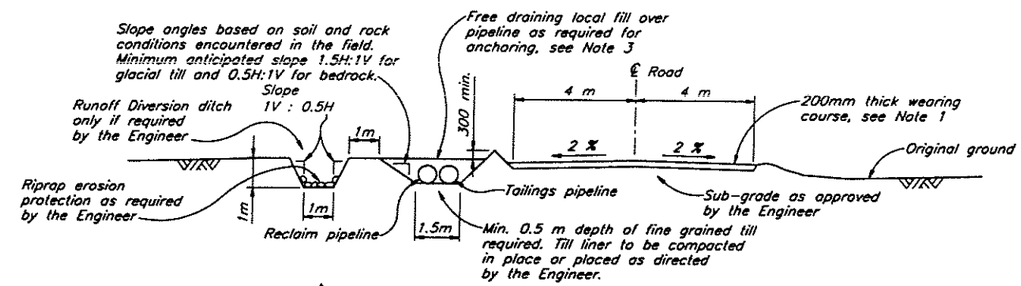

(5) **SECTION 4/1625.218 , 2/1625.226**

TAILINGS ACCESS ROAD WITH DIVERSION DITCH ON FLAT GROUND

Scale B

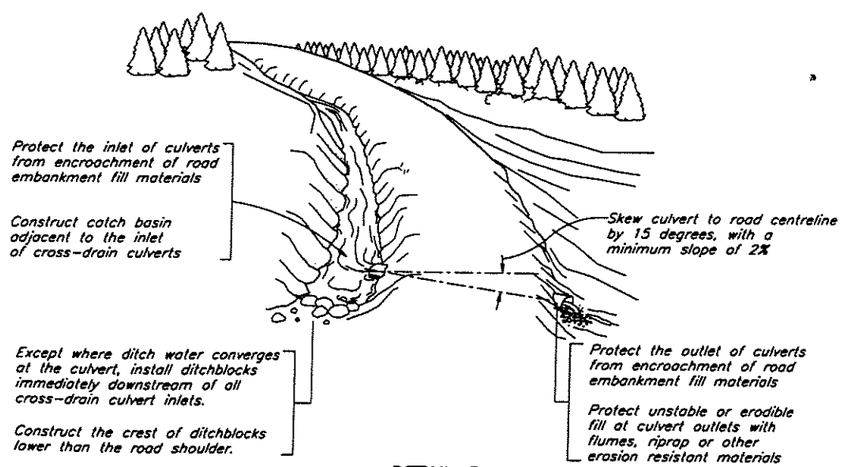

DETAIL B

TYPICAL CROSS-DRAIN CULVERT

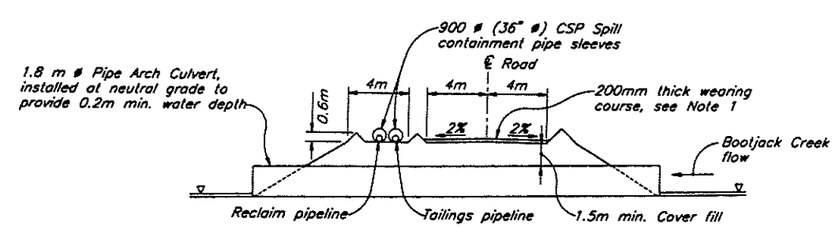

SECTION 3/1625.218 (5)

TAILINGS ACCESS ROAD BOOTJACK CREEK CROSSING

Scale A

NOTES

1. Wearing course required for Tailings Access Road and Bootjack-Morehead connector relocation only.
2. For crossing under road, tailings and reclaim pipelines to be installed in individual 900 mm (min.) dia. culverts laid under road with 500 mm min. cover. Culverts laid immediately downslope of cross-drain.
3. Spacing of fill for anchoring to be determined in the field by the Engineer. Anchor posts or concrete anchor blocks can be substituted for local fill.
4. (5) Trench width may vary locally to accomodate additional pipelines or structures in the trench.
5. Tailings and reclaim pipelines reversed between Drop Box No. 1 and Drop Box No. 2.

B: 2 1 0 2 4 6 8 10 m

A: 10 5 0 10 20 m

* "SIGNATURES AND PROFESSIONAL SEAL ON REV.0 ORIGINAL"

CAD FILE: \1625\027\027 1:200 Plot 1=0.2 July 12, 1996

DRG. NO.	DESCRIPTION
1625.218	TAILINGS STORAGE FACILITY – TAILINGS DISTRIBUTION AND RECLAIM SYSTEM – PLAN

REFERENCE DRAWINGS

REV.	DATE	DESCRIPTION	APPROVED

REVISIONS

REV.	DATE	DESCRIPTION	APPROVED
5	JULY 15/96	PIPELINES RELOCATED	KJB
4	MAY 28/96	ISSUED FOR CONSTRUCTION	
3	APR 26/96	REVISE DRAINAGE DITCHES	
2	APR 19/96	SECTIONS REVISED	
1	MAR 22/96	RE-ISSUED FOR TENDER	
0	JUNE 2/95	ISSUED FOR TENDER	

REVISIONS

KNIGHT PIESOLD LIMITED
CONSULTING ENGINEERS – VANCOUVER, B.C.

*

DESIGNED	MBS/HPD
DRAWN	VY
CHECKED	*
APPROVED	*

DATE JUNE 2, 1995

IMPERIAL METALS CORPORATION

MT. POLLEY PROJECT

TAILINGS STORAGE FACILITY
TAILINGS DISTRIBUTION AND
RECLAIM SYSTEM – SECTIONS AND DETAILS

SCALE AS SHOWN | DRG. NO. 510-61-02-1625.219 | REV. 5

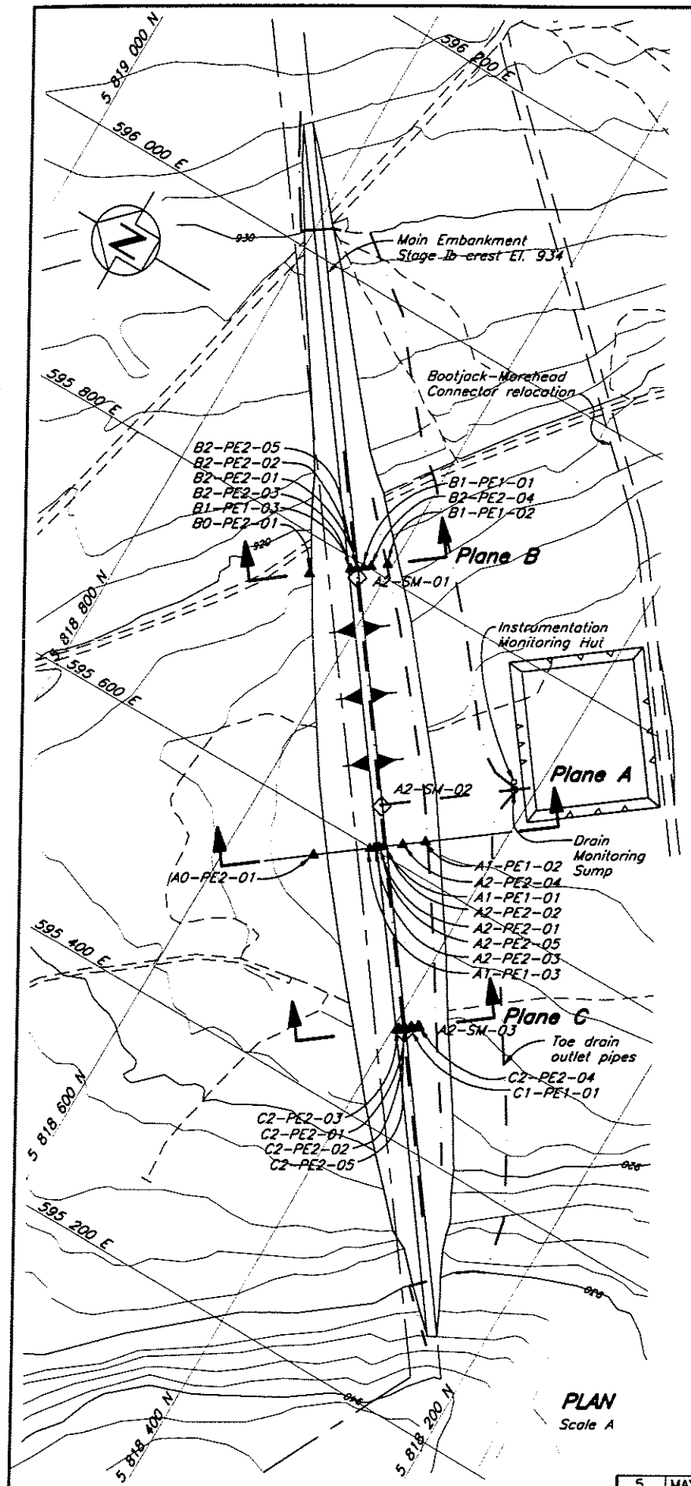

PLAN
Scale A

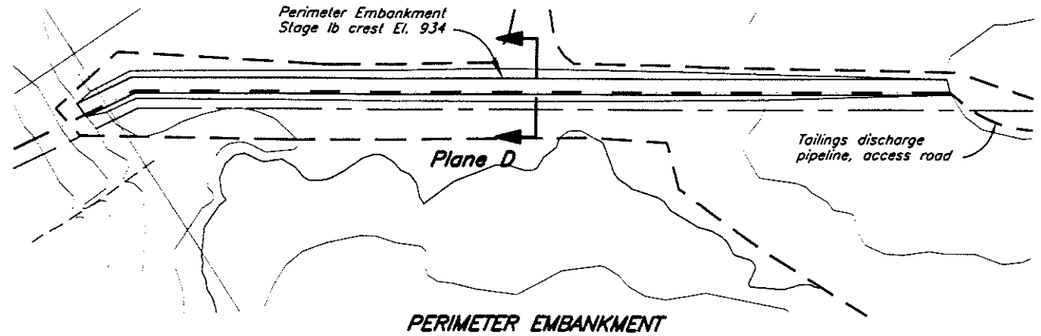

PERIMETER EMBANKMENT
Scale A

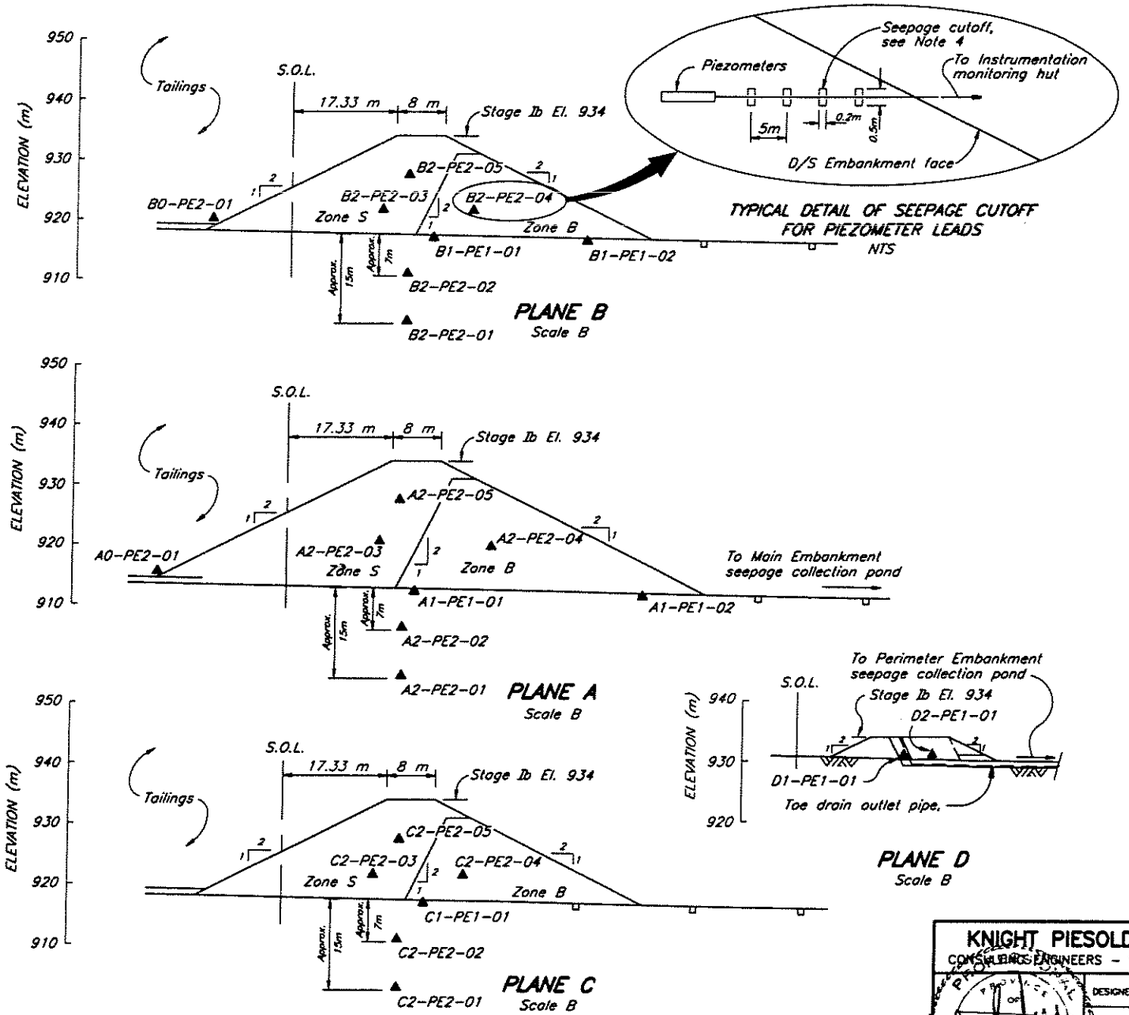

SUMMARY OF PIEZOMETERS LEAD LENGTHS	
PIEZOMETER No.	LEAD LENGTH (m)
A0-PE2-01	250
A1-PE1-01	175
A1-PE1-02	150
A2-PE2-01	200
A2-PE2-02	200
A2-PE2-03	175
A2-PE2-04	175
A2-PE2-05	175
B0-PE2-01	350
B1-PE1-01	300
B1-PE1-02	275
B2-PE2-01	325
B2-PE2-02	325
B2-PE2-03	325
B2-PE2-04	300
B2-PE2-05	325
C1-PE1-01	325
C2-PE2-01	350
C2-PE2-02	350
C2-PE2-03	325
C2-PE2-04	325
C2-PE2-05	325
D1-PE1-01	90
D2-PE1-01	85

NOTES

1. Piezometers are vibrating type, RST model VW-2100 with a pressure rating of 100 psi or equivalent, connected to a readout panel via standard non-vented model VW-232 direct burial cable.
2. Piezometer leads are to be extended to a prefabricated monitoring hut located downstream of the final embankment toe.
3. Future survey monuments not shown. A minimum of 2 monuments will be installed for each embankment raise.
4. Seepage cutoffs placed at 5m intervals with 10% bentonite added to fine grained till backfill

LEGEND

A0-PE2-01 — Plane I.D. (A, B etc.)
— Area (0-Tailings, 1-Drain, 2-Embankment)
— Number I.D.
— Pressure Rating (1-Low, 2-High)
— Type of Instrumentation (PE-Piezometer electric, SM-Survey Monument)

A0-PE2-01 ▲ Tailings mass piezometer
A1-PE1-01 ▲ Embankment foundation drain and toe drain piezometer
A2-PE2-01 ▲ Embankment foundation and fill piezometer
A2-SM-01 ◇ Embankment survey monument

B 10 0 10 20 30 40 50 m
A 100 50 0 100 200 m

DRG. NO.	DESCRIPTION
REFERENCE DRAWINGS	

REV.	DATE	DESCRIPTION	APPROVED
5	MAY 24/96	ISSUED FOR CONSTRUCTION	KJB
4	APR 1/96	PIEZOMETER INFORMATION ADDED	
3	MAR 25/96	ROAD UPDATED	
REVISIONS			

REV.	DATE	DESCRIPTION	APPROVED
2	JAN. 18/96	REVISED SEEPAGE COLLECTION POND	
1	JULY 27/95	BASIN GROUNDWATER DRAINS REVISED	
0	JUNE 2/95	ISSUED FOR TENDER	
REVISIONS			

KNIGHT PIESOLD LIMITED
CONSULTING ENGINEERS - VANCOUVER, B.C.

DESIGNED GRG
DRAWN RDT/VY
CHECKED MDB
APPROVED KJB

IMPERIAL METALS CORPORATION

MT. POLLEY PROJECT

TAILINGS STORAGE FACILITY
INSTRUMENTATION

DATE JUNE 2, 1995 | SCALE AS SHOWN | DRG. NO. 510-77-01-1625.220 | REV. 5

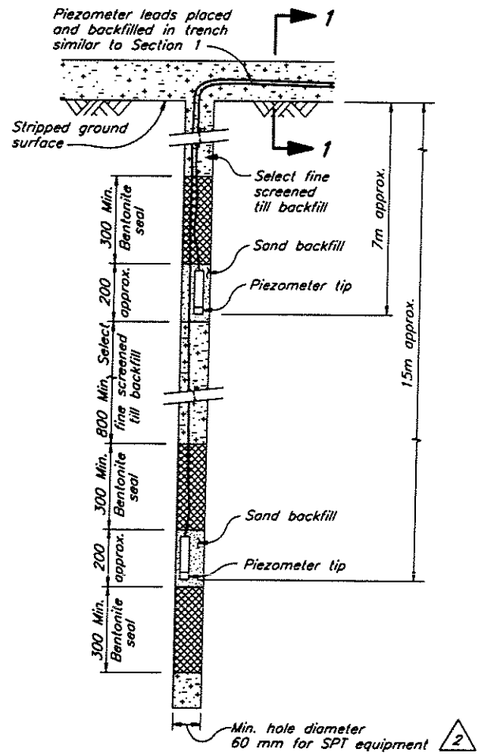

DETAIL A
INSTALLATION OF PIEZOMETERS IN BOREHOLES
N.T.S.

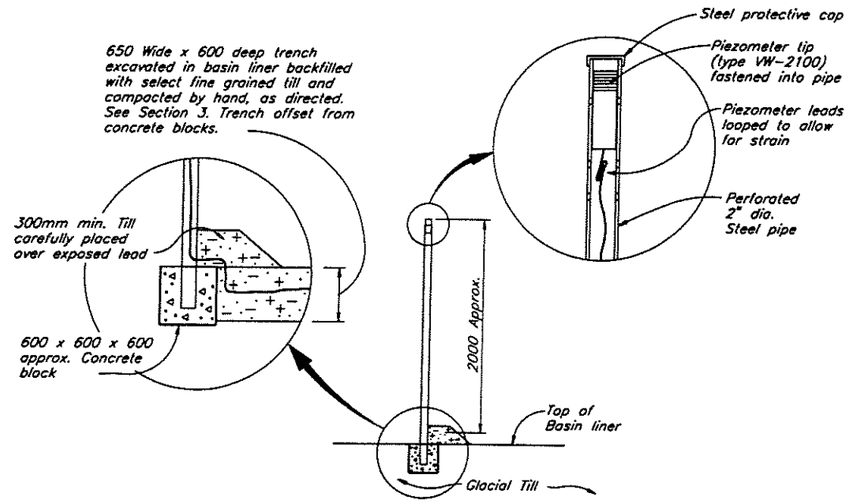

DETAIL B
VERTICAL SUPPORT FOR TAILINGS PIEZOMETERS
N.T.S.

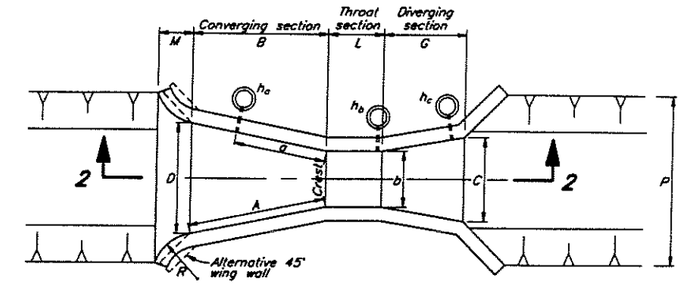

PARSHALL FLUME (2 FT. SIZE) – PLAN
DETAIL B/1625.215

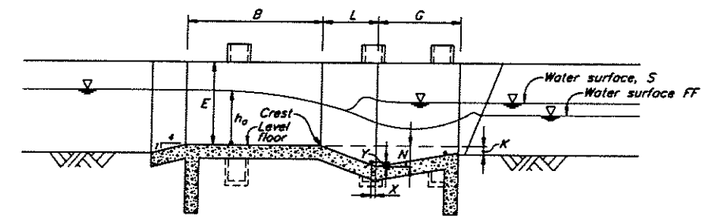

SECTION 2
FLOW MEASUREMENT FOR INFLOWS TO TAILINGS STORAGE FACILITY
AREA B RUNOFF COLLECTION AND TAILINGS AREA DIVERSION DITCHES

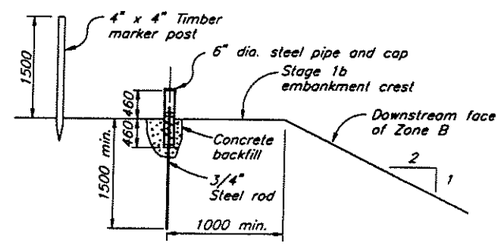

DETAIL OF SURFACE MOVEMENT MONUMENT
N.T.S.

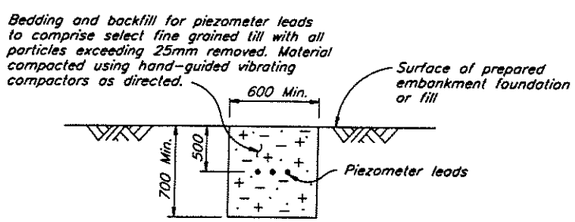

SECTION 1
TYPICAL SECTION THROUGH PIEZOMETER LEAD TRENCH IN PREPARED EMBANKMENT FOUNDATION OR IN ZONE S AND B FILL
N.T.S.

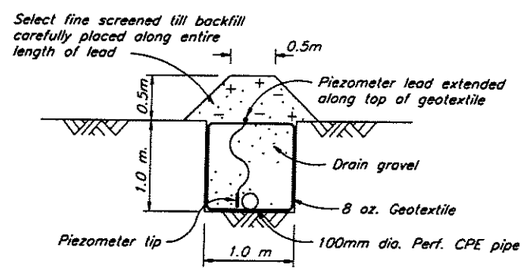

DETAIL C
TYPICAL PIEZOMETER INSTALLATION IN EMBANKMENT FOUNDATION DRAIN OR TOE DRAIN
N.T.S.

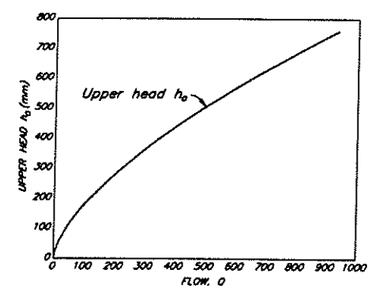

Dimensions for Parshall flume with throat width b_c of 2 feet.	
b_c	609.6
A	1524
a	1016
B	1495
C	914
D	1206
E	914
L	610
G	914
H	–
K	76
M	381
N	229
P	1854
R	508
X	51
Y	76
Z	–

Scale 1000 500 0 1000 2000 mm

CAD FILE:\1625\220\029 1:20 Plot 1=0.02 May 24, 1996

REFERENCE DRAWINGS	
1625.220	TAILINGS STORAGE FACILITY – INSTRUMENTATION
DRG. NO.	DESCRIPTION

REVISIONS			
REV.	DATE	DESCRIPTION	APPROVED

REVISIONS			
3	MAR 24/96	ISSUED FOR CONSTRUCTION	KJB
2	APR 1/96	NOTE ADDED	
1	JAN. 18/96	GROUNDWATER DRAINS REMOVED	
0	JUNE 2/95	ISSUED FOR TENDER	
REV.	DATE	DESCRIPTION	APPROVED

KNIGHT PIESOLD LIMITED
CONSULTING ENGINEERS – VANCOUVER, B.C.

PROFESSIONAL ENGINEER – PROVINCE OF BRITISH COLUMBIA – K. P. KUBRAKOVICH

DESIGNED	KDE/MBS
DRAWN	VY
CHECKED	KDK
APPROVED	KJB

IMPERIAL METALS CORPORATION

MT. POLLEY PROJECT

TAILINGS STORAGE FACILITY
INSTRUMENTATION
SECTIONS AND DETAILS

DATE JUNE 2, 1995 | SCALE AS SHOWN | DRG. NO. 510-77-02-1625.221 | REV. 3

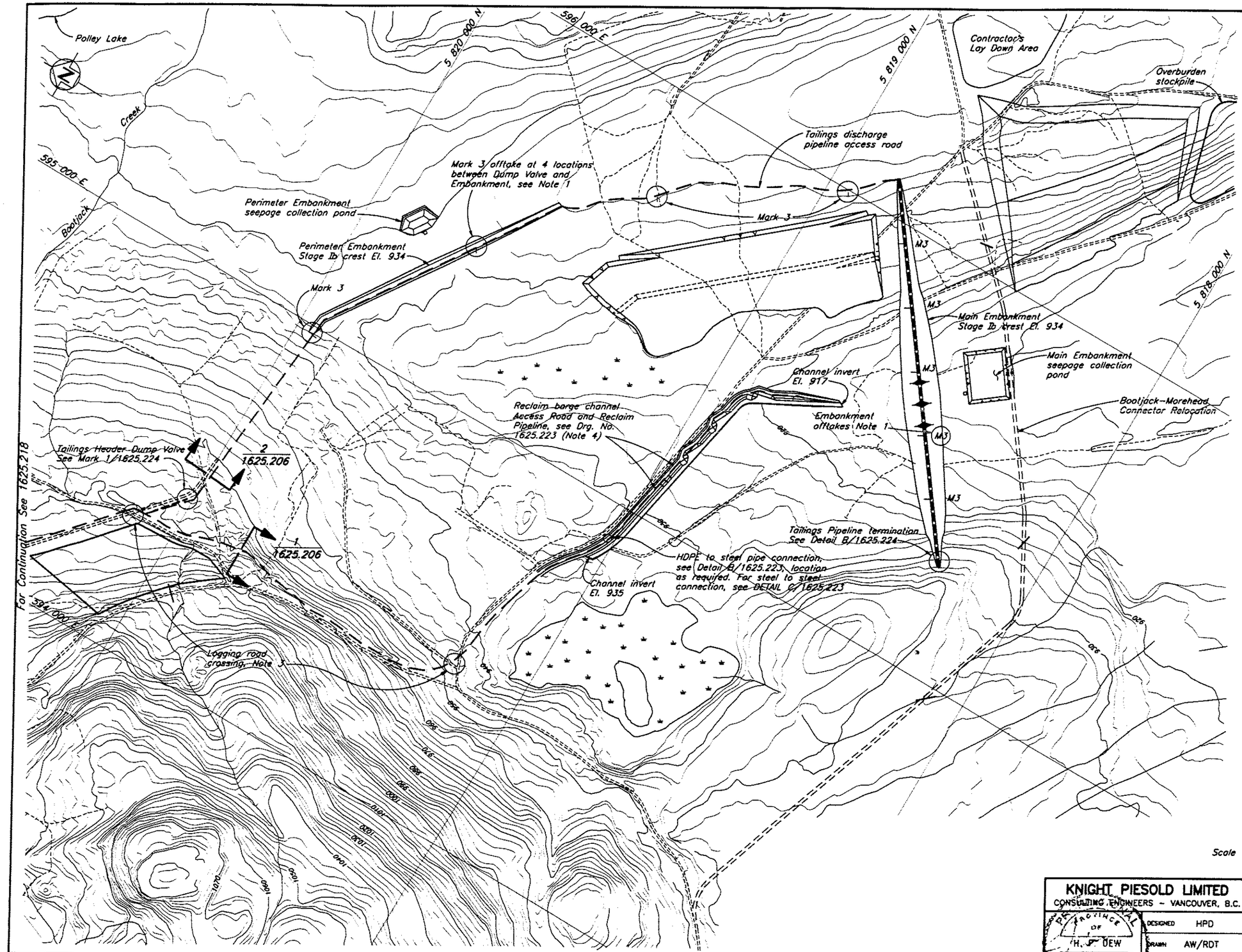

NOTES

1. For Tailings Pipework offtake locations, see Drg. No. 1625.228.
2. All bends in tailings and reclaim HDPE pipelines are made using natural flexibility of pipe unless otherwise noted. Minimum bend radius to be 25 diameter.
3. Pipelines at logging road crossings to be sleeved in 900mm ø x 2mm minimum wall CSP culvert with 500mm minimum depth of cover. Backfill to be well graded and compacted sand and gravel.
4. Reclaim pipeline is assumed to be required only to original ground elevation of 925 m. Additional line may be required if elevation of ponded water at startup is significantly lower than 925 m. See additional notes on Drg. No. 1625.206.

CAD FILE:\1625\DWG\DWG 1:5000 PM 1:5 July 12, 1996

DRG. NO.	DESCRIPTION
1625.223	RECLAIM PIPELINE DETAILS
1625.218	TAILINGS DISTRIBUTION AND RECLAIM SYSTEM – PLAN

REFERENCE DRAWINGS

REV.	DATE	DESCRIPTION	APPROVED

REVISIONS

REV.	DATE	DESCRIPTION	APPROVED
0	JULY 15/96	ISSUED FOR CONSTRUCTION	KJB

REVISIONS

KNIGHT PIESOLD LIMITED
CONSULTING ENGINEERS – VANCOUVER, B.C.

PROFESSIONAL ENGINEER – PROVINCE OF BRITISH COLUMBIA – H. J. DEW

DESIGNED	HPD
DRAWN	AW/RDT
CHECKED	KJB
APPROVED	KJB

IMPERIAL METALS CORPORATION

MT. POLLEY PROJECT

TAILINGS STORAGE FACILITY
TAILINGS IMPOUNDMENT
TAILINGS AND RECLAIM PIPEWORK PLAN

DATE JULY 15, 1996 | SCALE AS SHOWN | DRG. NO. 1625.222 | REV. 0

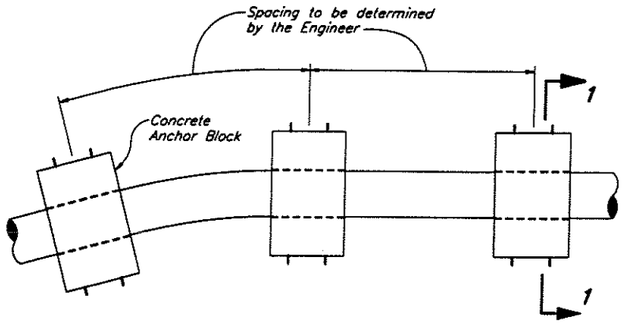

PIPELINE BEND ANCHORING
Scale B

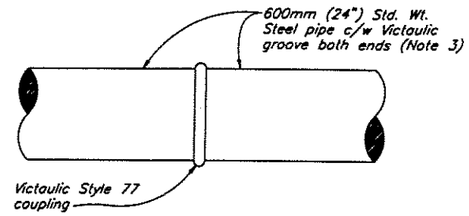

DETAIL C/1625.222
STEEL RECLAIM PIPE CONNECTION
Scale A

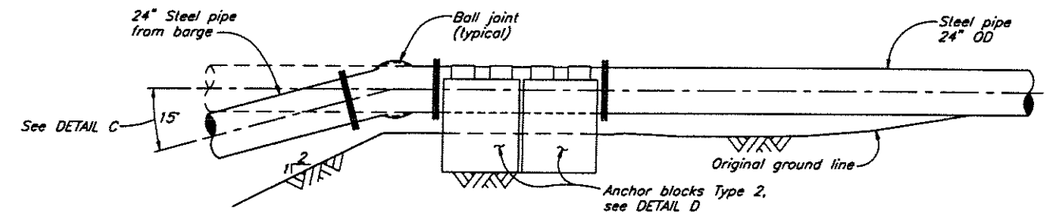

DETAIL A, A/1625.206
ONSHORE BALL JOINT
Scale B

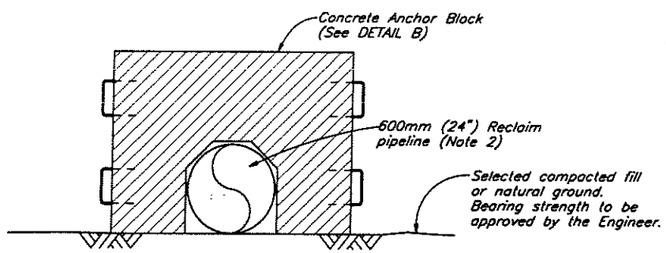

SECTION 1
CONCRETE ANCHOR BLOCK – TYPE 1 APPLICATION
Scale A

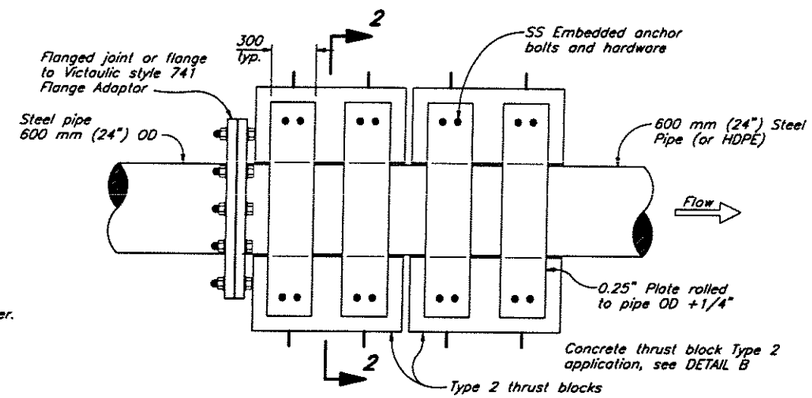

DETAIL D, B/1625.222
CONCRETE THRUST BLOCK – TYPE 2 APPLICATION
CONNECTION BETWEEN STEEL AND HDPE PIPE
CONNECTION AT RECLAIM BOOSTER PUMPSTATION DISCHARGE
AND CONNECTION AT BARGE OFFTAKE BALL JOINT
Scale A

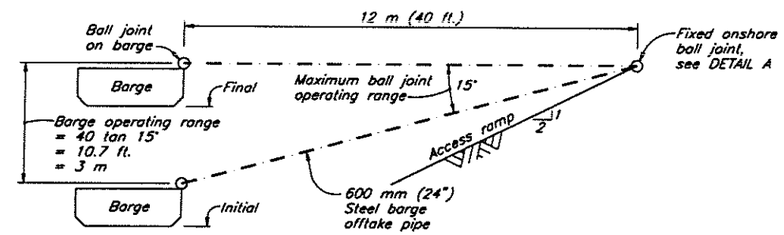

DETAIL C
BARGE OPERATING RANGE – SCHEMATIC

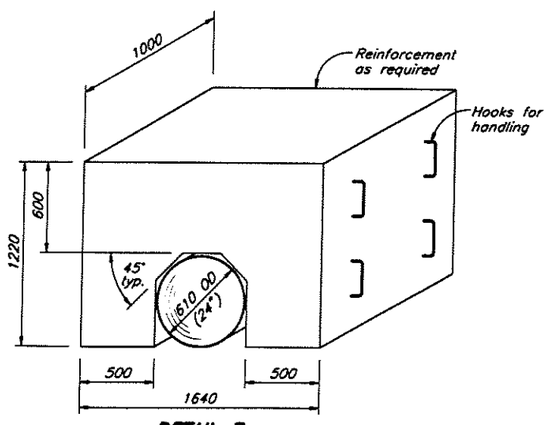

DETAIL B
TYPICAL PORTABLE CONCRETE BLOCK FOR 24" OD PIPE
(4.5 TONNE)
Scale A

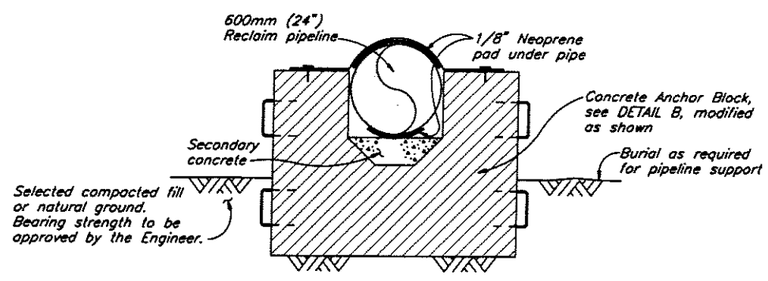

SECTION 2
CONCRETE THRUST BLOCK – TYPE 2 APPLICATION
Scale A

NOTES

1. Concrete anchoring blocks to be used at barge ball joint and at locations where pipeline changes from steel to HDPE.
2. Anchor blocks may be used for reclaim or tailings pipeline as required by the Engineer. Modifications will be required for pipe diameter other than 24".
3. Victaulic grooves to be rolled if pipe wall thickness is less than 0.375".

B 2000 1000 0 2000 4000 mm
A 1000 500 0 1000 2000 mm

CAD FILE:\1625\CMD\1625.DWG 1:20 PM 1-0-02 STD.1 July 12, 1996

DRG. NO.	DESCRIPTION
1625.224	TAILINGS DISTRIBUTION SYSTEM – DETAILS
1625.222	TAILINGS IMPOUNDMENT – TAILINGS AND RECLAIM PIPEWORK PLAN

REFERENCE DRAWINGS

REV.	DATE	DESCRIPTION	APPROVED

REVISIONS

REV.	DATE	DESCRIPTION	APPROVED
0	JULY 15/96	ISSUED FOR CONSTRUCTION	KJB

REVISIONS

KNIGHT PIESOLD LIMITED
CONSULTING ENGINEERS – VANCOUVER, B.C.
REGISTERED PROFESSIONAL ENGINEER OF BRITISH COLUMBIA
H. P. DEW

DESIGNED HPD/NM
DRAWN AW/RDT/NSD
CHECKED KJB
APPROVED KJB

IMPERIAL METALS CORPORATION
MT. POLLEY PROJECT
TAILINGS STORAGE FACILITY
RECLAIM PIPELINE DETAILS

DATE JULY 15, 1996 | SCALE AS SHOWN | DRG. NO. 1625.223 | REV. 0

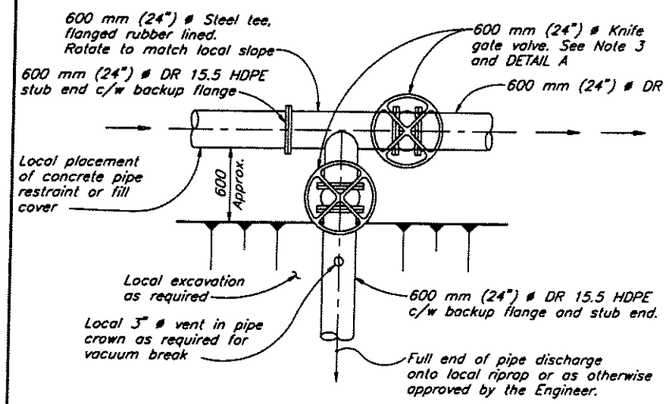

TAILINGS HEADER DUMP VALVE (1 No)
(MARK 1/1625.222)
Scale A

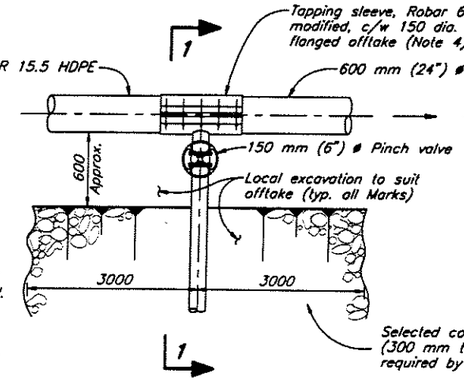

TAILINGS HEADER OFFTAKE (TYPICAL) (45 No)
(MARK 2)
Scale A

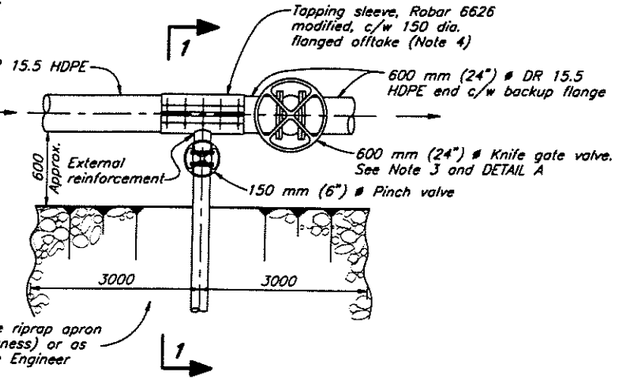

TAILINGS HEADER OFFTAKE
WITH HEADER VALVE (TYPICAL) (MARK 3) (10 No)
Scale A

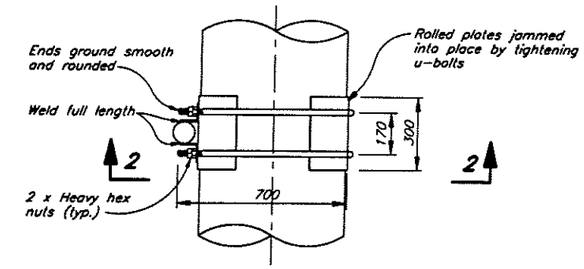

PIPE RESTRAINT FOR 24" HDPE
NTS

(Locate as required by the Engineer)

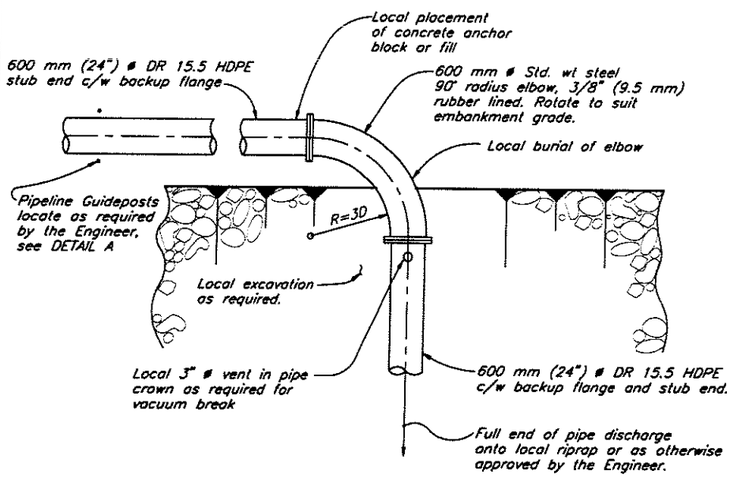

DETAIL B / 1625.222
TAILINGS HEADER PIPELINE TERMINATION (1 No)
(MARK 4)
Scale A

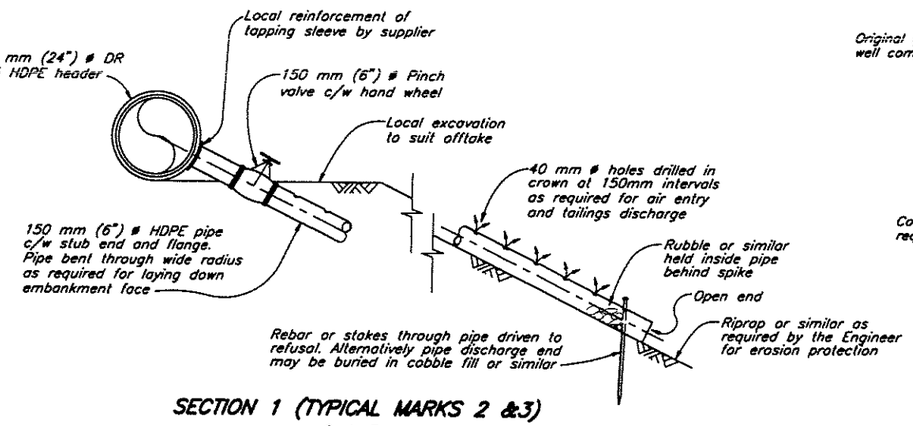

SECTION 1 (TYPICAL MARKS 2 &3)
Scale B

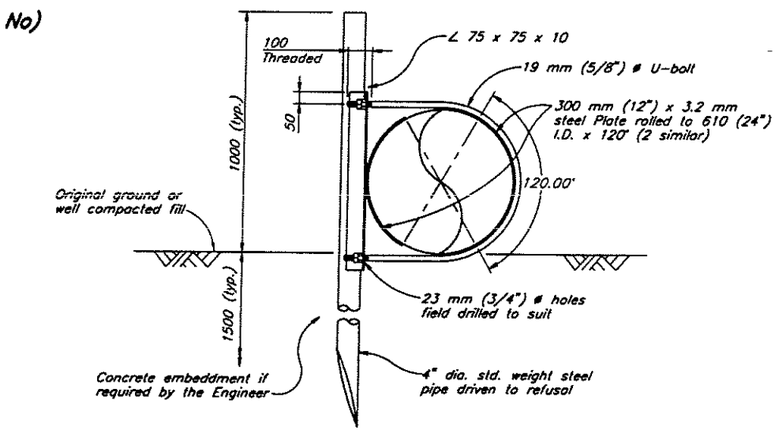

SECTION 2
NTS

NOTES

1. Rubber lining to be Linatex PGR or approved equivalent.
2. Pipe restraint by local burial of pipeline or as otherwise required by the Engineer to control movement due to thermal and hydraulic forces.
3. 24" Knife Gate Valve c/w hydraulic operator. One portable hydraulic power pack to be supplied for valve operation.
4. Robar 6626 c/w 1/4" rubber lining of offtake and external reinforcement of offtake to sleeve joint.
5. HDPE Pipe ID exceeds that of knife gate valve and is to be field bevelled to match.
6. HDPE pipelines to be connected under cool conditions with snaking allowance made for additional thermal contraction of empty pipeline.

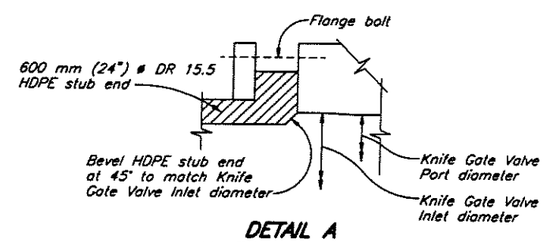

DETAIL A
KNIFE GATE INLET
(Note 5)
NTS

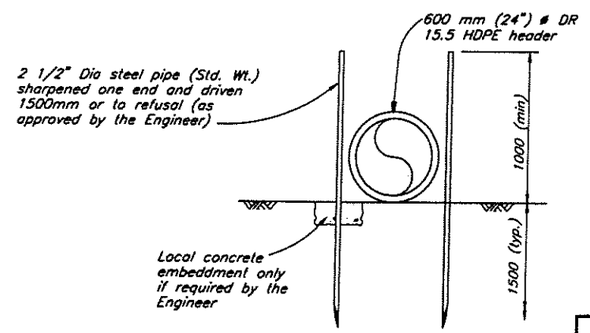

DETAIL B
GUIDEPOST
Scale B

Scale B: 1 0.5 0 1 2 m

Scale A: 1 0 1 2 3 4 5 m

DRG. NO.	DESCRIPTION
1625.222	TAILINGS STORAGE FACILITY – TAILINGS AND RECLAIM PIPEWORK PLAN
1625.228	TAILINGS STORAGE FACILITY – TAILINGS AND RECLAIM PIPEWORK PROFILES

REFERENCE DRAWINGS

REV.	DATE	DESCRIPTION	APPROVED

REVISIONS

REV.	DATE	DESCRIPTION	APPROVED
0	JULY 15/96	ISSUED FOR CONSTRUCTION	KJB

REVISIONS

KNIGHT PIESOLD LIMITED
CONSULTING ENGINEERS – VANCOUVER, B.C.

PROFESSIONAL ENGINEER – PROVINCE OF BRITISH COLUMBIA – H. PLAEW

DESIGNED	HPD
DRAWN	AW/RDT
CHECKED	KJB
APPROVED	KJB

IMPERIAL METALS CORPORATION

MT. POLLEY PROJECT

TAILINGS STORAGE FACILITY
TAILINGS DISTRIBUTION SYSTEM
DETAILS

DATE JULY 15, 1996 | SCALE AS SHOWN | DRG. NO. 1625.224 | REV. 0

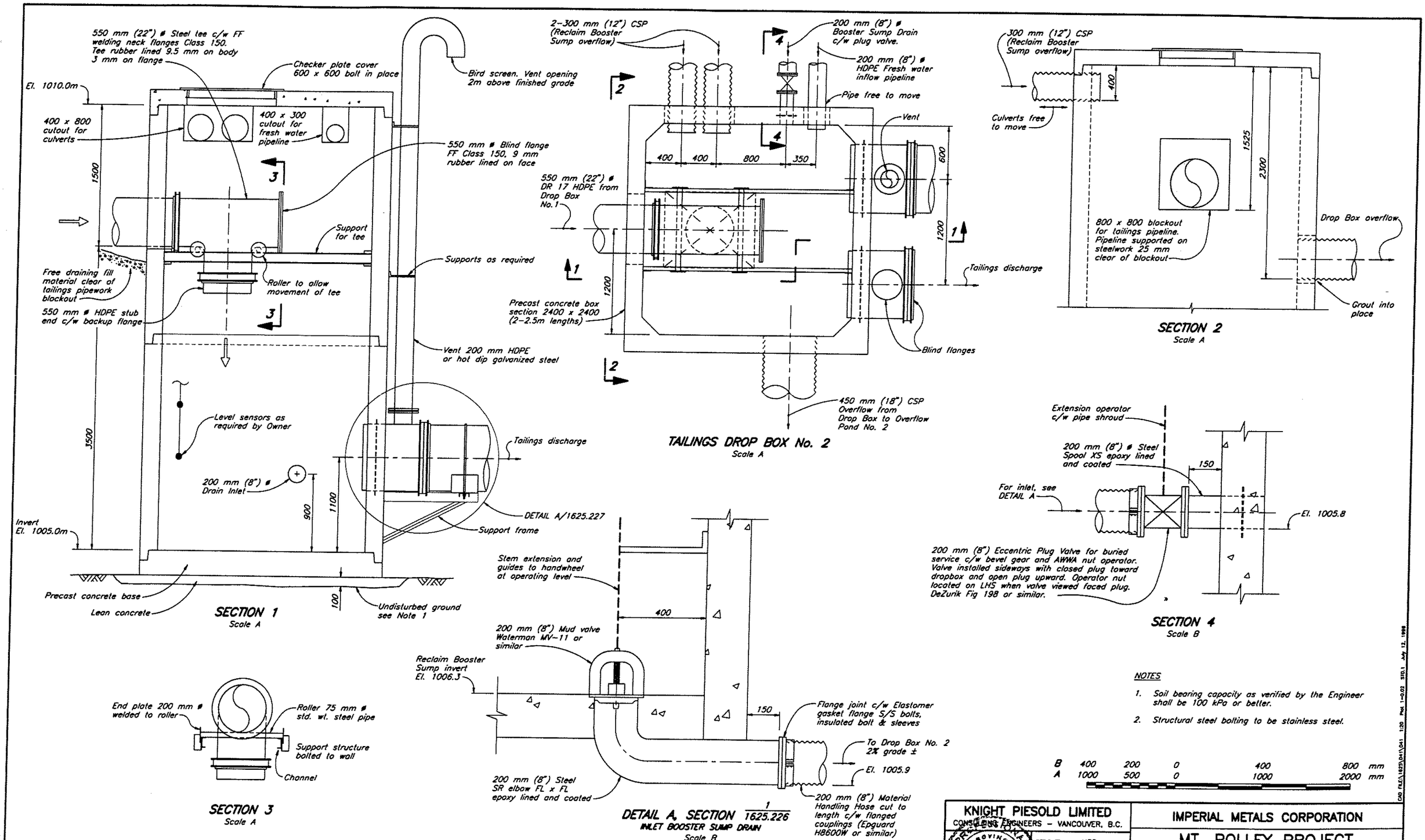

NOTES

1. Soil bearing capacity as verified by the Engineer shall be 100 kPa or better.
2. Structural steel bolting to be stainless steel.

DRG. NO.	DESCRIPTION
1625.228	TAILINGS STORAGE FACILITY – TAILINGS AND RECLAIM PIPEWORK PROFILES
1625.227	TAILINGS PIPEWORK DETAILS – DROP BOX NO. 1
1625.226	TAILINGS STORAGE FACILITY – RECLAIM BOOSTER PUMP STATION, AREA – G.A.

REFERENCE DRAWINGS

REV.	DATE	DESCRIPTION	APPROVED
0	JULY 15/96	ISSUED FOR CONSTRUCTION	KJB

REVISIONS

KNIGHT PIESOLD LIMITED
CONSULTING ENGINEERS – VANCOUVER, B.C.

PROFESSIONAL ENGINEER – PROVINCE OF BRITISH COLUMBIA – H. P. DEW

DESIGNED	HPD
DRAWN	TAM/NSD
CHECKED	KJB
APPROVED	KJB

IMPERIAL METALS CORPORATION

MT. POLLEY PROJECT

TAILINGS STORAGE FACILITY
TAILINGS PIPEWORK DETAILS
DROP BOX No. 2

DATE JULY 15, 1996 | SCALE AS SHOWN | DRG. NO. 1625.225 | REV. 0

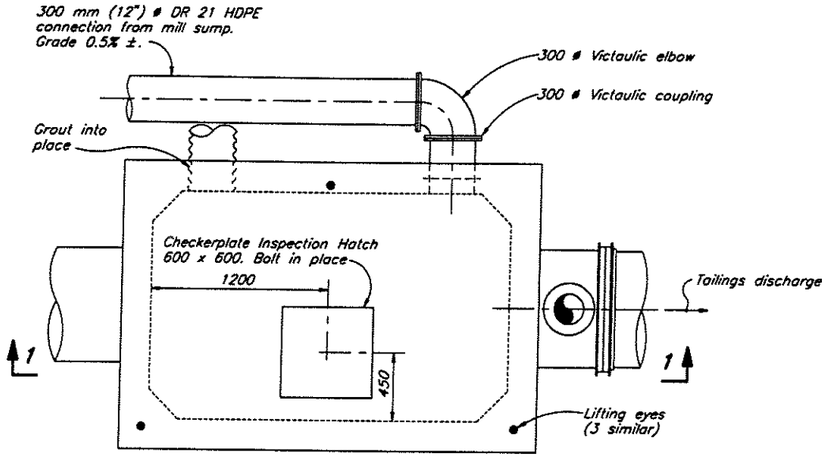

PLAN, DETAIL A 1625.232
TAILINGS DROP BOX NO. 1 (Note 1)
Scale A

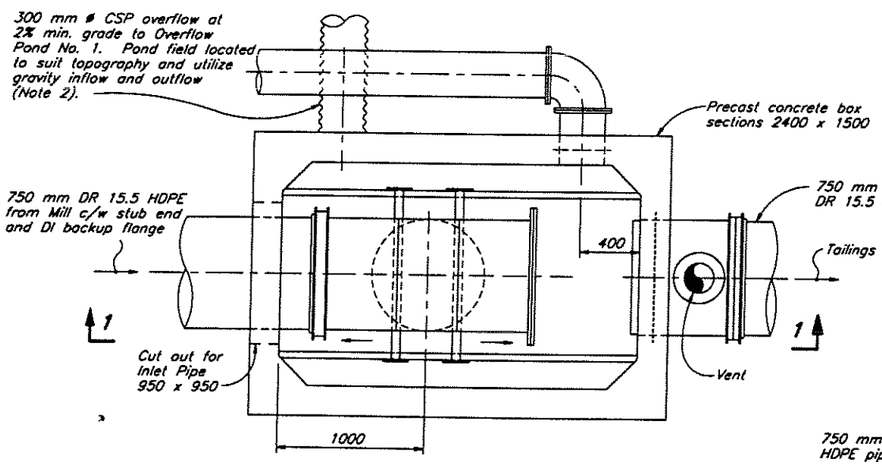

SECTION 3
Scale A

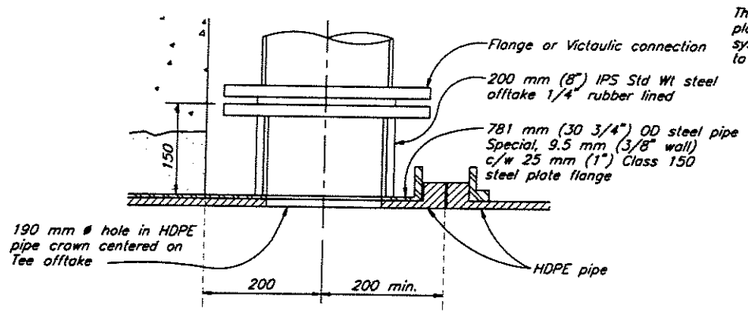

DETAIL B
VENT CONNECTION
Scale C

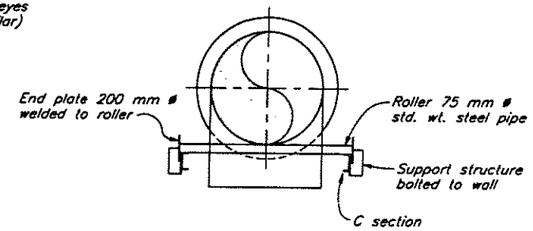

SECTION 2
Scale A

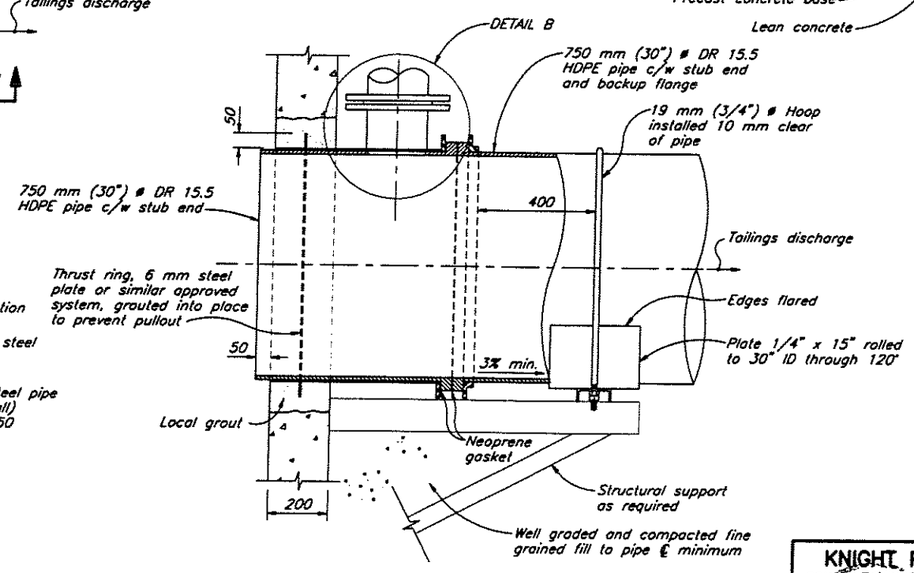

DETAIL A, A 1625.225
DISCHARGE PIPELINE
Scale B

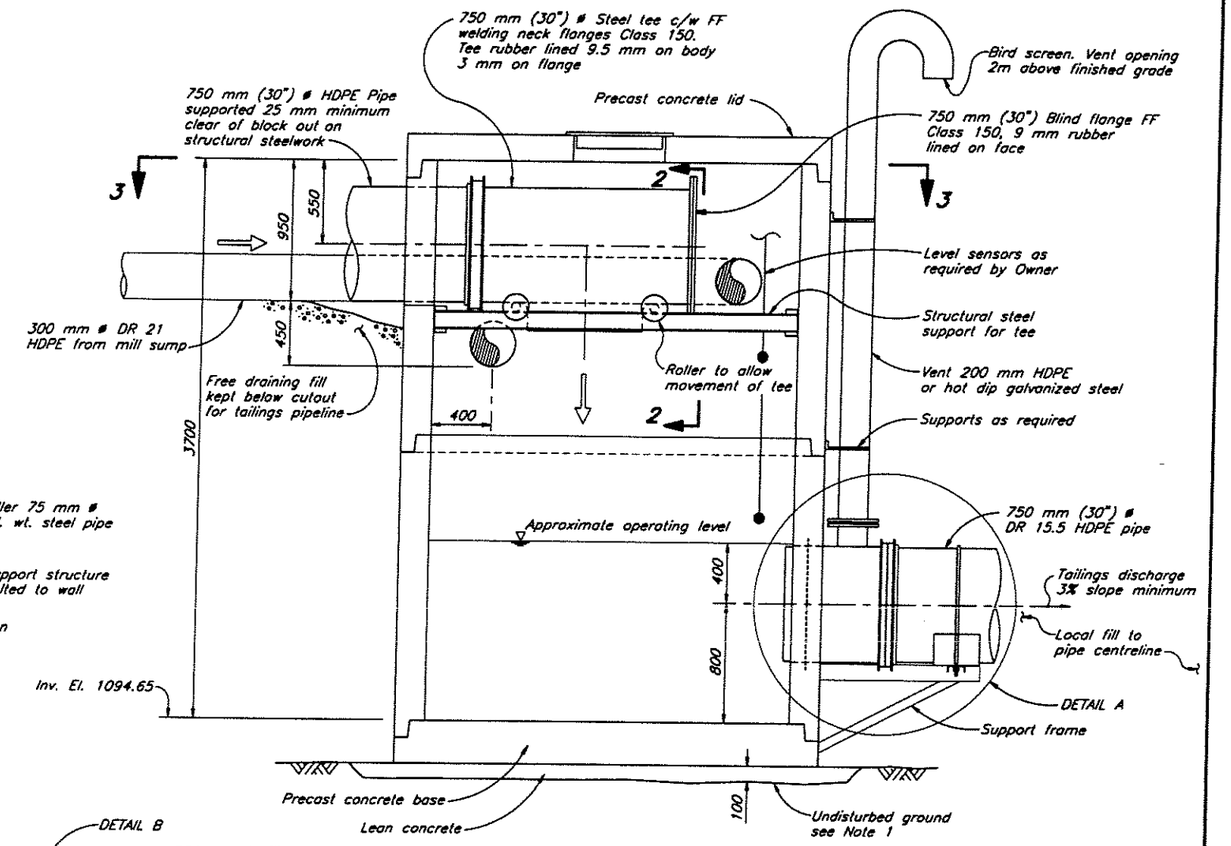

SECTION 1
Scale A

NOTES

1. Soil bearing capacity as verified by the Engineer shall be 100kPa or better.
2. An Overflow Pond capacity of 150 m^3 below the invert of the pond outlet pipe is required to contain a volume equal to that of the upstream tailings pipeline.

C	250	125	0	250	500	mm
B	500	250	0	500	1000	mm
A	1000	500	0	1000	2000	mm

CAD FILE:\1625\050\050 1:20 Plot 1=0.02 STD.1 July 12, 1996

DRG. NO.	DESCRIPTION
1625.228	TAILINGS STORAGE FACILITY – TAILINGS AND RECLAIM PIPEWORK PROFILES
1625.225	TAILINGS PIPEWORK DETAILS – DROP BOX No. 2

REFERENCE DRAWINGS

REV.	DATE	DESCRIPTION	APPROVED

REVISIONS

REV.	DATE	DESCRIPTION	APPROVED
0	JULY 15/96	ISSUED FOR CONSTRUCTION	KJB

REVISIONS

KNIGHT PIESOLD LIMITED
CONSULTING ENGINEERS – VANCOUVER, B.C.

REGISTERED PROFESSIONAL ENGINEER OF BRITISH COLUMBIA H. P. DEW

DESIGNED	HPD
DRAWN	TAM/NSD
CHECKED	KJB
APPROVED	KJB

IMPERIAL METALS CORPORATION

MT. POLLEY PROJECT

TAILINGS STORAGE FACILITY
TAILINGS PIPEWORK DETAILS
DROP BOX No. 1

DATE	SCALE	DRG. NO.	REV.
JULY 15, 1996	AS SHOWN	1625.227	0

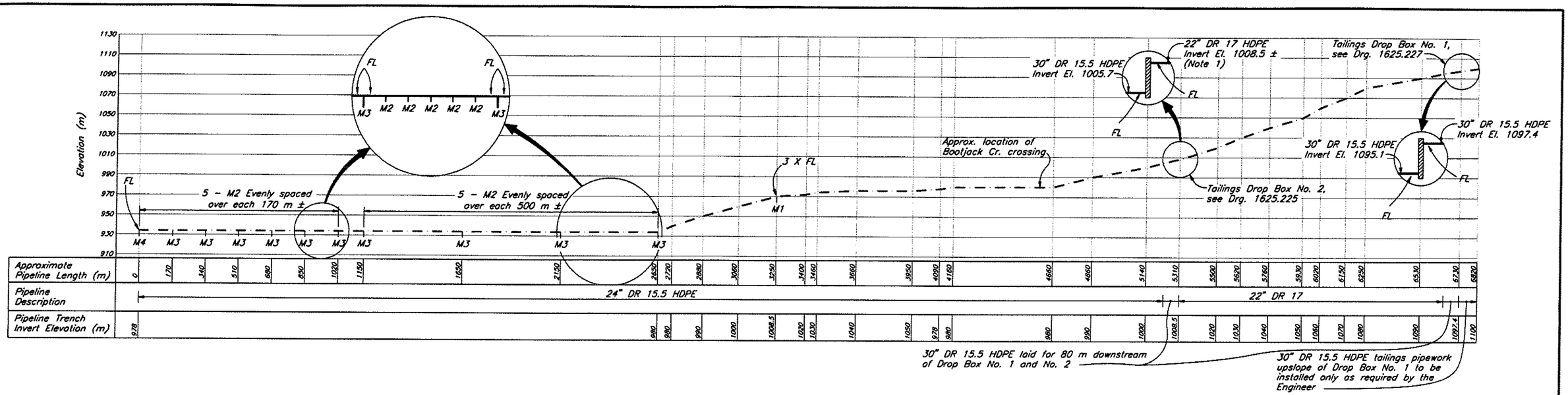

TAILINGS PIPELINE PROFILE

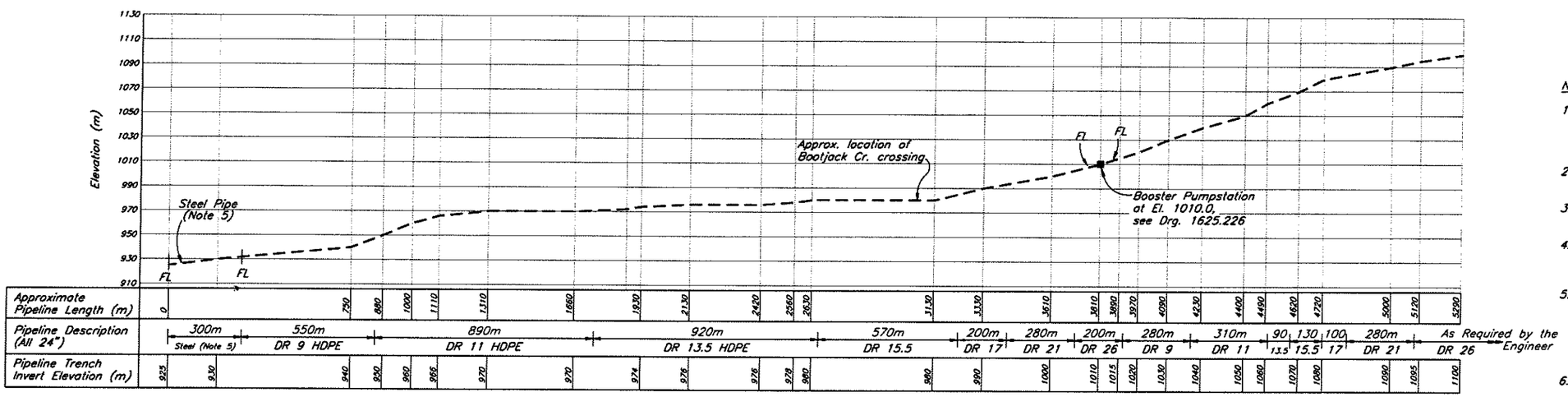

RECLAIM PIPELINE PROFILE

NOTES

1. Profiles, invert elevations and pipeline lengths shown are subject to variations resulting from As Built access road alignment, local construction requirements and correction of survey errors.
2. Flange and offtake locations may be adjusted in the field by the Engineer.
3. Flanges in pipelines must be supported off the ground if pipelines are dragged into position.
4. Any section of HDPE pipeline damaged during installation by a local reduction in wall thickness of 10% or more is to be cut out and replaced.
5. Reclaim profile assumes a pond water level of 925 m at mill startup. If water level is significantly lower, additional steel or DR 9 pipeline and additional barge channel excavation may be required as recommended by the Engineer. See also Note 2 on Drg. No. 1625.206.
6. With each barge relocation, all steel and DR 9 pipeline also requires to be relocated.
7. Butt fusion joining of lower DR pipe to higher DR pipe requires end of lower DR pipe to be bevelled to same inside diameter as higher DR pipe.

LEGEND

FL - Flange Joints (Minimum)

M1 - Mark 1 offtake (1 Required) Drg. 1625.224

M2 - Mark 2 offtake (45 Required) Drg. 1625.224

M3 - Mark 3 offtake (10 Required) Drg. 1625.224

M4 - Mark 4 offtake (1 Required) Drg. 1625.224

DR 9 - HDPE Pipe Dimensional Ratio (typical)

Scale 200 100 0 200 400 600 800 1000 Metres

DRG. NO.	DESCRIPTION
1625.227	- TSF Tailings Pipework Details - Drop Box No. 1
1625.226	- TSF Booster Pump Station - Location Details
1625.225	- TSF Tailings Pipework Details - Drop Box No. 2
1625.224	- TSF Tailings Distribution System Details

REFERENCE DRAWINGS

REV.	DATE	DESCRIPTION	APPROVED

REVISIONS

REV.	DATE	DESCRIPTION	APPROVED
0	JULY 15/96	ISSUED FOR CONSTRUCTION	KJB

REVISIONS

KNIGHT PIESOLD LIMITED
CONSULTING ENGINEERS - VANCOUVER, B.C.

PROFESSIONAL ENGINEER - PROVINCE OF BRITISH COLUMBIA - H. P. DEW

DESIGNED	HPD
DRAWN	NSD
CHECKED	KJD
APPROVED	KJB

IMPERIAL METALS COMPANY

MT. POLLEY PROJECT

TAILINGS STORAGE FACILITY
TAILINGS AND RECLAIM
PIPEWORK PROFILES

DATE JULY 15, 1996 | SCALE AS SHOWN | DRG. NO. 1625.228 | REV. 0

CAD FILE:\1625\045\045_1=10000.PNL 1=10 July 12, 1996

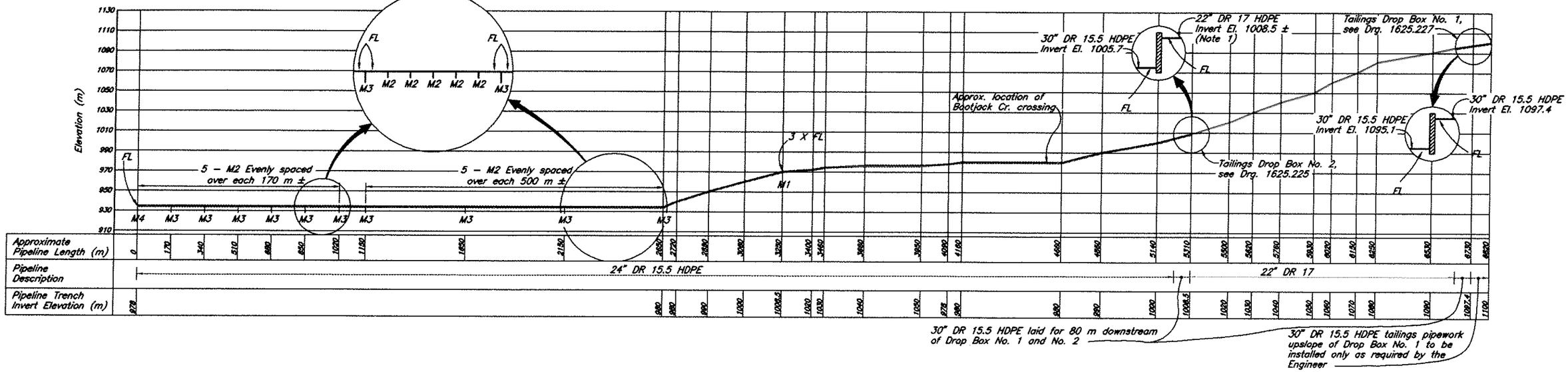

TAILINGS PIPELINE PROFILE

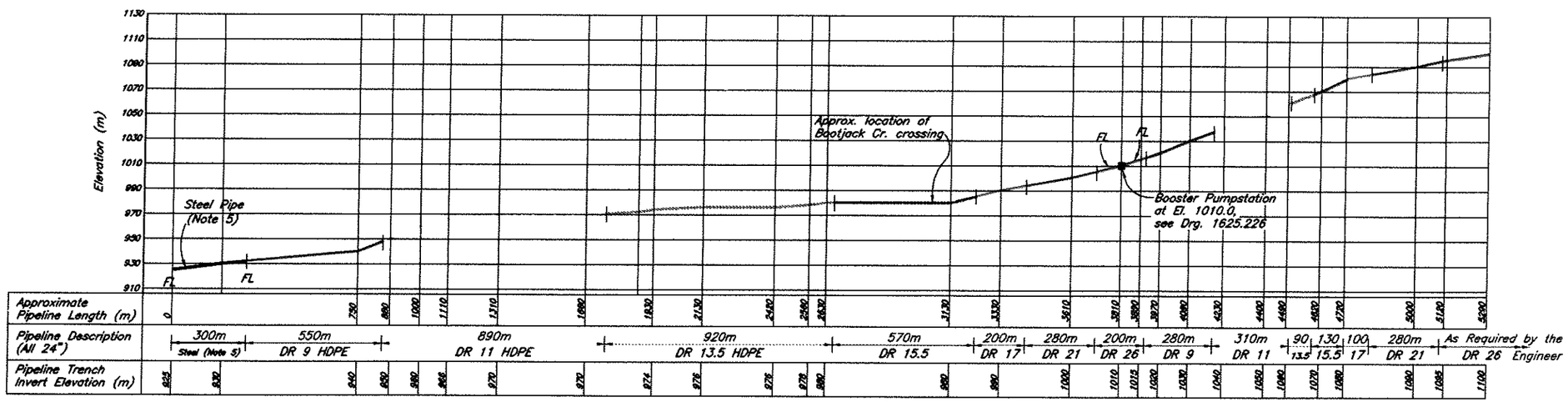

RECLAIM PIPELINE PROFILE

NOTES

1. Profiles, invert elevations and pipeline lengths shown are subject to variations resulting from As Built access road alignment, local construction requirements and correction of survey errors.
2. Flange and offtake locations may be adjusted in the field by the Engineer.
3. Flanges in pipelines must be supported off the ground if pipelines are dragged into position.
4. Any section of HDPE pipeline damaged during installation by a local reduction in wall thickness of 10% or more is to be cut out and replaced.
5. Reclaim profile assumes a pond water level of 925 m at mill startup. If water level is significantly lower, additional steel or DR 9 pipeline and additional barge channel excavation may be required as recommended by the Engineer. See also Note 2 on Drg. No. 1625.206.
6. With each barge relocation, all steel and DR 9 pipeline also requires to be relocated.
7. Butt fusion joining of lower DR pipe to higher DR pipe requires end of lower DR pipe to be bevelled to same inside diameter as higher DR pipe.

HDPE COLOUR STRIPE CODE

DR 9	– RED	
DR 11	–	
DR 13.5	– GRAY	
DR 15.5	– BROWN	
DR 17	– BLUE	
DR 21	– PURPLE	
DR 26	– GREEN	

LEGEND

FL – Flange Joints (Minimum)

M1 – Mark 1 offtake (1 Required) Drg. 1625.224

M2 – Mark 2 offtake (45 Required) Drg. 1625.224

M3 – Mark 3 offtake (10 Required) Drg. 1625.224

M4 – Mark 4 offtake (1 Required) Drg. 1625.224

DR 9 – HDPE Pipe Dimensional Ratio (typical)

Scale 200 100 0 200 400 600 800 1000 Metres

DRG. NO.	DESCRIPTION
1625.227	– TSF Tailings Pipework Details – Drop Box No. 1
1625.226	– TSF Booster Pump Station – Location Details
1625.225	– TSF Tailings Pipework Details – Drop Box No. 2
1625.224	– TSF Tailings Distribution System Details

REFERENCE DRAWINGS

REV.	DATE	DESCRIPTION	APPROVED

REVISIONS

REV.	DATE	DESCRIPTION	APPROVED
0	JULY 15/96	ISSUED FOR CONSTRUCTION	KJB

REVISIONS

KNIGHT PIESOLD LIMITED
CONSULTING ENGINEERS – VANCOUVER, B.C.

PROFESSIONAL ENGINEER – PROVINCE OF BRITISH COLUMBIA – H. R. DEW

DESIGNED	HPD
DRAWN	NSD
CHECKED	KJB
APPROVED	JJB

IMPERIAL METALS COMPANY

MT. POLLEY PROJECT

TAILINGS STORAGE FACILITY
TAILINGS AND RECLAIM
PIPEWORK PROFILES

DATE JULY 15, 1996 | SCALE AS SHOWN | DRG. NO. 1625.228C | REV. 0

CAD FILE: \1625\DWG\1625COLOR 1=10000 PCK 1=10

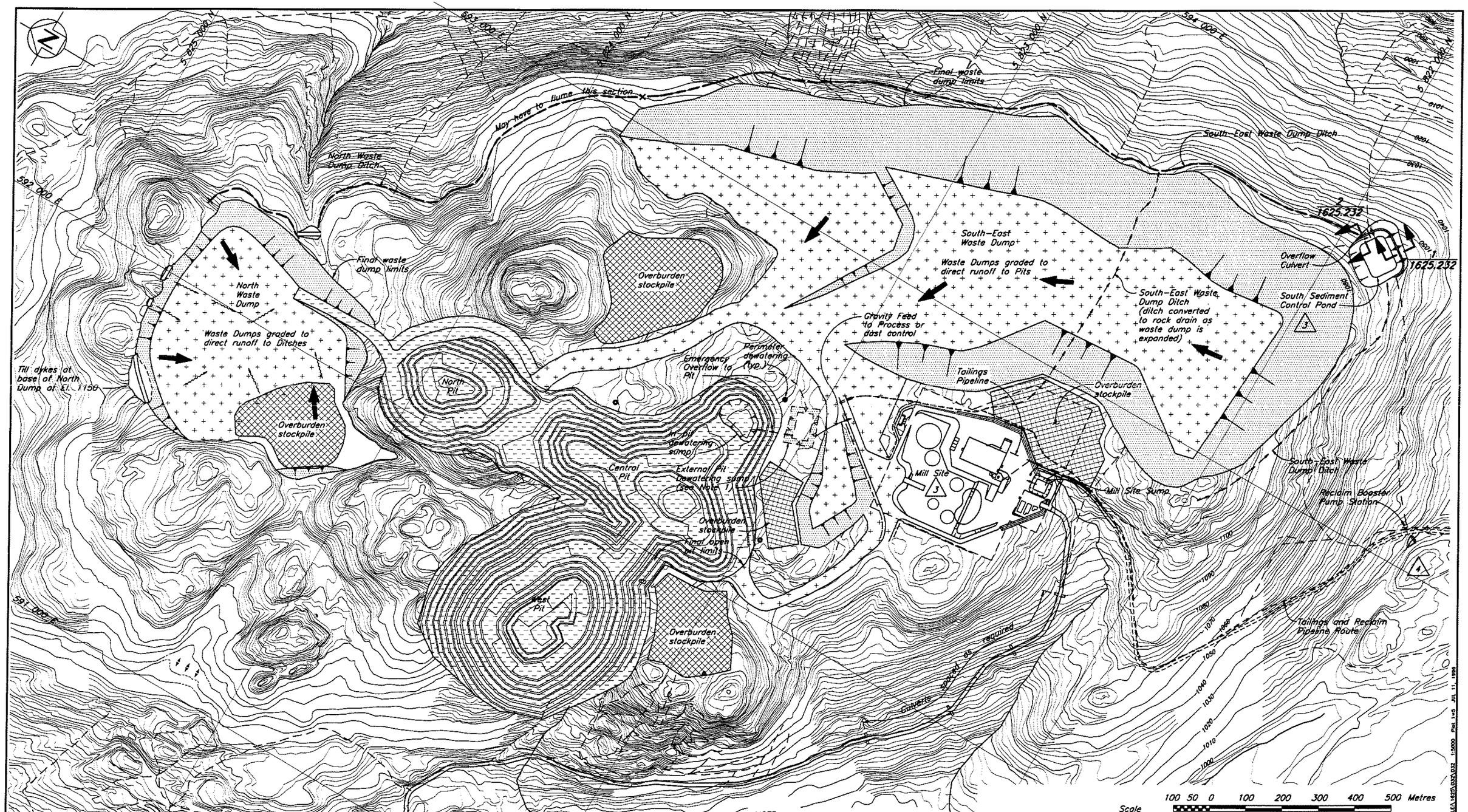

NOTE

1. External Pit Dewatering Sump to be installed when required.
2. Open pit and waste dump layouts digitized from information supplied by Imperial Metals.

DRG. NO.	DESCRIPTION
1625.232	DRAINAGE PLAN – SECTIONS AND DETAILS

REFERENCE DRAWINGS

REV.	DATE	DESCRIPTION	APPROVED
4	JULY 15/96	RELOCATE BOOSTER PUMP STATION	KJB
3	APRIL 1/96	MILLSITE AND CONTROL POND REVISED	

REVISIONS

REV.	DATE	DESCRIPTION	APPROVED
2	MAR 20/96	UPDATE DRAINAGE, MILLSITE & SOUTH SEDIMENT CONTROL POND	
1	MAR 14/96	UPDATED OPEN PITS,WASTEDUMPS,SITE DRAINAGE	
0	AUG 24/95	ISSUED FOR CONSTRUCTION	

REVISIONS

* "SIGNATURES AND PROFESSIONAL SEAL ON REV.0 ORIGINAL"

KNIGHT PIESOLD LIMITED
CONSULTING ENGINEERS – VANCOUVER, B.C.

*

DESIGNED KDE/MM
DRAWN RDT/VY/NSD
CHECKED *
APPROVED *

IMPERIAL METALS CORPORATION

MT. POLLEY PROJECT

DRAINAGE PLAN
MINE SITE

DATE AUGUST 24, 1995 | SCALE AS SHOWN | DRG. NO. 1625.230 | REV. 4

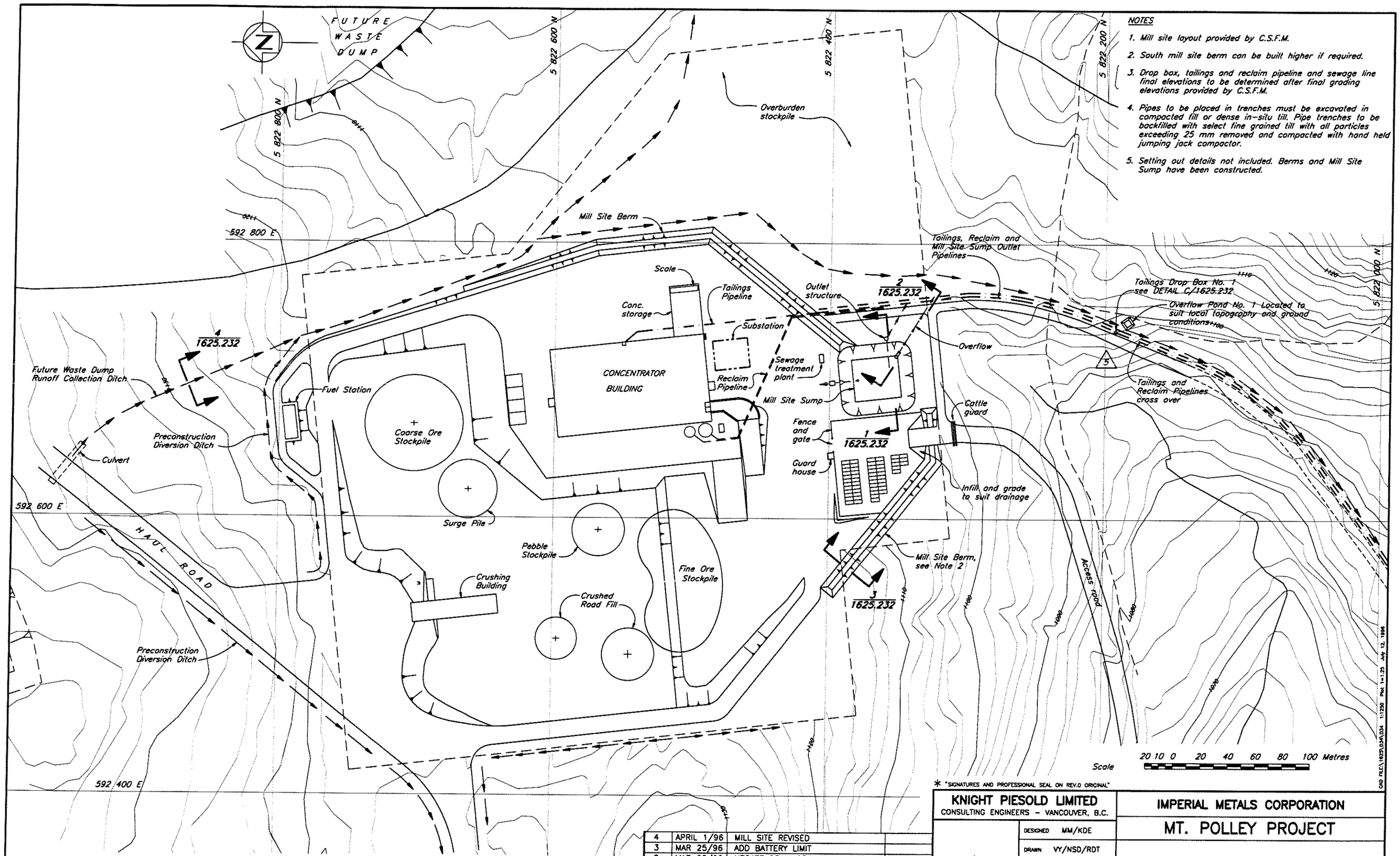

NOTES

1. Mill site layout provided by C.S.F.M.
2. South mill site berm can be built higher if required.
3. Drop box, tailings and reclaim pipeline and sewage line final elevations to be determined after final grading elevations provided by C.S.F.M.
4. Pipes to be placed in trenches must be excavated in compacted fill or dense in-situ till. Pipe trenches to be backfilled with select fine grained till with all particles exceeding 25 mm removed and compacted with hand held jumping jack compactor.
5. Setting out details not included. Berms and Mill Site Sump have been constructed.

* "SIGNATURES AND PROFESSIONAL SEAL ON REV.0 ORIGINAL"

DRG. NO.	DESCRIPTION
1625.232	DRAINAGE PLAN – SECTIONS AND DETAILS

REFERENCE DRAWINGS

REV.	DATE	DESCRIPTION	APPROVED
5	JULY 15/96	OVERFLOW POND NO. 1 ADDED	KJB

REVISIONS

REV.	DATE	DESCRIPTION	APPROVED
4	APRIL 1/96	MILL SITE REVISED	
3	MAR 25/96	ADD BATTERY LIMIT	
2	MAR 20/96	UPDATE DRAINAGE AND MILLSITE	
1	MAR 14/96	RELOCATED OPEN PIT SUMP	
0	AUG 24/95	ISSUED FOR CONSTRUCTION	

REVISIONS

KNIGHT PIESOLD LIMITED
CONSULTING ENGINEERS – VANCOUVER, B.C.

*

DESIGNED MM/KDE
DRAWN VY/NSD/RDT
CHECKED *
APPROVED *

IMPERIAL METALS CORPORATION

MT. POLLEY PROJECT

DRAINAGE PLAN
MILL SITE

DATE AUGUST 24, 1995 | SCALE AS SHOWN | DRG. NO. 1625.231 | REV. 5

CAD FILE\1625\034\034 1:1250 Plot 1=1.25 July 12, 1996

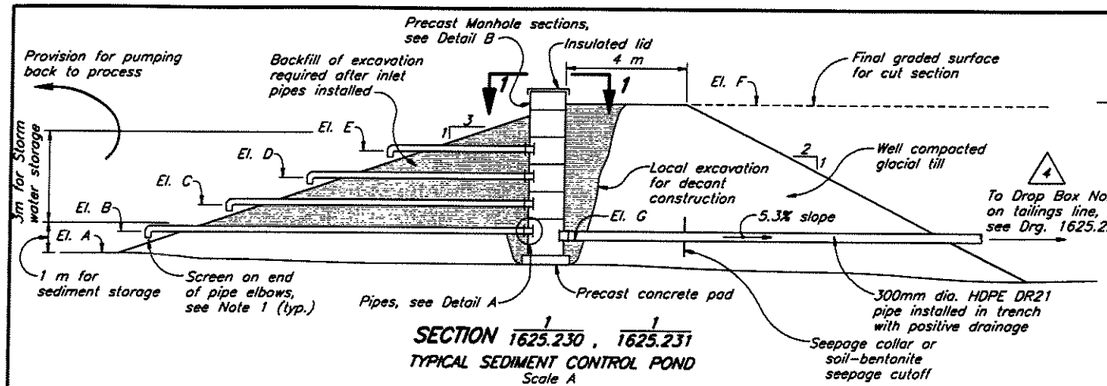

SECTION 1/1625.230 , 1/1625.231
TYPICAL SEDIMENT CONTROL POND
Scale A

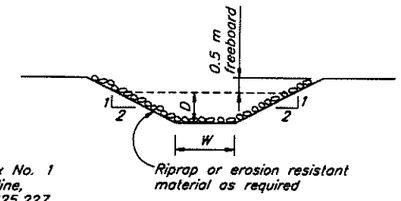

SECTION 4/1625.231
TYPICAL DITCH SECTION
Scale A

DITCH DIMENSIONS		
Ditch	W(m)	D(m)
All Mill Site Diversion Ditches	1.0	0.35
All Waste Dump Ditches	1.0	0.6

NOTES

1. Pipe elbows provided for oil skimming.
2. Sediment control berm to be constructed using suitable glacial till materials from local excavations.
3. Mill site berm to be constructed with material excavated during site preparation. All soil types can be placed in the berm, but they must be separated.
4. Mill site berm to be constructed in max. 0.5 m lifts, with compaction provided by trackwalking the surface prior to placement of the next lift.
5. Silt fence and hay bales provided for sediment control.
6. Rockfill to comprise clean coarse gravel and cobbles.
7. All pond excavations and fill sections to be completed in low permeabilty glacial till materials.
8. Local pipe containment channel width will vary to accomodate additional pipework and structures in channel.

El.	Mill Site Sump*	South Sediment Pond	Pit Dewatering Sump
A	1099.0	1057.5	To Be Determined
B	–	1058.2	
C	1101.81	1059.1	
D	1102.70	1060.0	
E	1103.61	1060.9	
F	1107.34	1062.0	
G	1100.56	1058.5	

*As Built

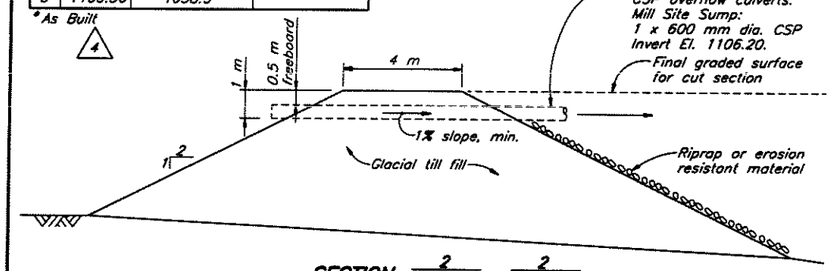

SECTION 2/1625.230, 2/1625.231
TYPICAL SEDIMENT CONTROL POND OVERFLOW CULVERTS
Scale A

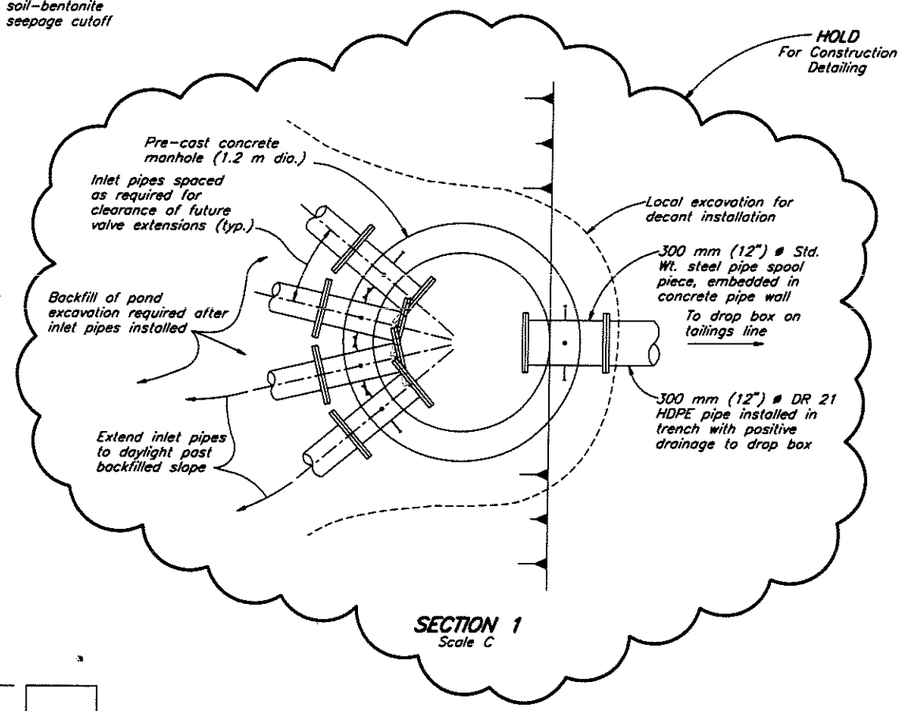

SECTION 1
Scale C

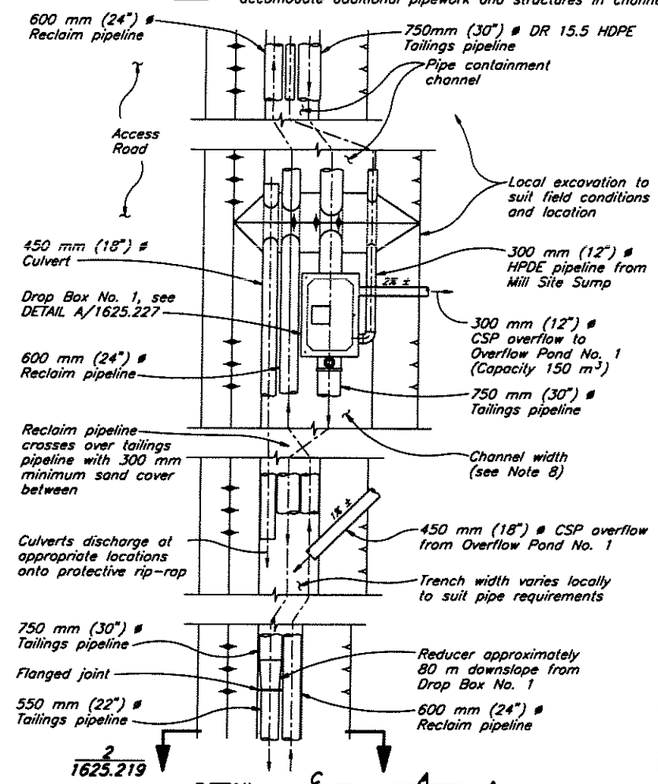

DETAIL C/1625.231 , A/1625.218
TAILINGS DROP BOX No. 1
Scale A

SECTION 3/1625.231
MILL SITE BERM SECTION
Scale A

POND	STORAGE VOLUMES (m^3) Live Storage	Dead Storage	CRITERIA
South Sediment Pond	46,000	5,000	10yr 24 hour precipitation event at start-up of operations
Pit Dewatering Sump – Initial	Not required	Not required	1.5 x 10yr 24 hour precipitation event at start-up of operations
Pit Dewatering Sump – Final	24,400	6,700	
Mill Site Sump	6,000	1,000	1.5 x 10yr 24 hour precipitation event

NOTES:
1. Initial Pit Dewatering Sump approx. 50% of final volume. Sump size to be increased in conjuction with waste dump expansion.
2. Final Pit Dewatering Sump includes 10% of Open Pit inflows.
3. Typical Sediment Control Pond and Typical Sediment Control Pond Overflow Culverts cross-sections will change in fill construction and will be appropriately adjusted in the field as determined by the Engineer.

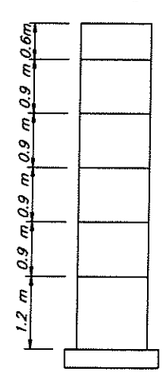

DETAIL B
TYPICAL MANHOLE SECTIONS FOR 5 m DEEP POND
NTS

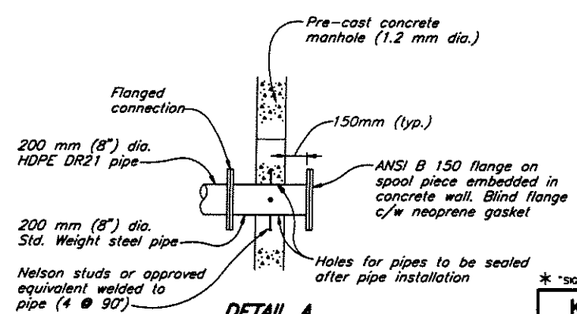

DETAIL A
Scale C

DRG. NO.	DESCRIPTION
1625.230	DRAINAGE PLAN – MINE SITE
1625.231	DRAINAGE PLAN – MILL SITE

REFERENCE DRAWINGS

REV.	DATE	DESCRIPTION	APPROVED

REVISIONS

REV.	DATE	DESCRIPTION	APPROVED
4	JULY 15/96	DETAIL AND ELEVATIONS MODIFIED	KJB
3	APR 1/96	UPDATE SEDIMENT CONTROL POND	
2	MAR 20/96	UPDATE SEDIMENT CONTROL POND	
1	MAR 14/96	UPDATE DITCHES AND NOTE 3 ADDED	
0	AUG 24/95	ISSUED FOR CONSTRUCTION	

REVISIONS

* "SIGNATURES AND PROFESSIONAL SEAL ON REV.0 ORIGINAL"

KNIGHT PIESOLD LIMITED
CONSULTING ENGINEERS – VANCOUVER, B.C.

DESIGNED	KDE/MM
DRAWN	RDT/NSD
CHECKED	*
APPROVED	*

IMPERIAL METALS CORPORATION
MT. POLLEY PROJECT
DRAINAGE PLAN SECTIONS AND DETAILS

DATE AUGUST 24, 1995 | SCALE AS SHOWN | DRG. NO. 1625.232 | REV. 4

CAD FILE:\1625\0335.033 1:100 Plot 1=0.1 STD.1 July 12, 1996